PHILIPS

50601/**/**
50602/**/**
50603/**/**
50604/**/**

50601/**/**

50602/**/**

50603/**/**

50604/**/**

User manual
Benutzerhandbuch
Notice d’emploi
Manual de usuario
Manual do usuário
Manuale d'uso
Gebruiksaanwijzing

Incl.

A

B

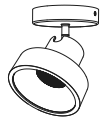

50601//****

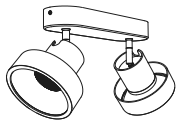

50602//****

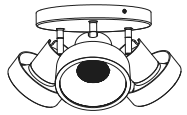

50603//****

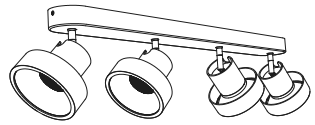

50604//****

Excl.

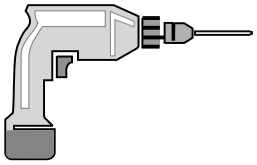

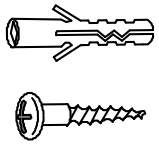

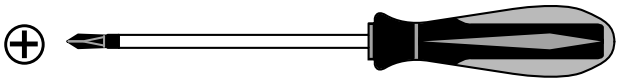

B

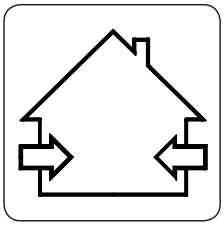

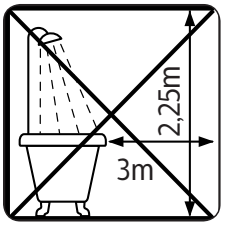

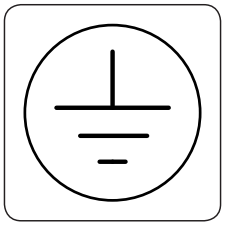

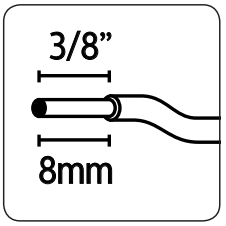

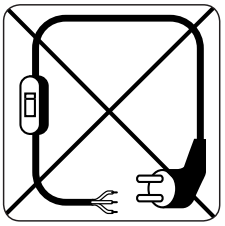

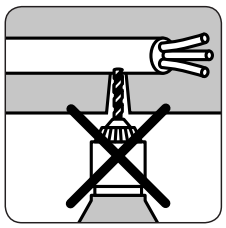

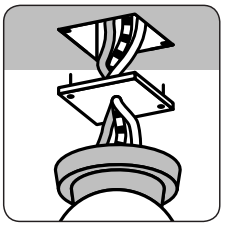

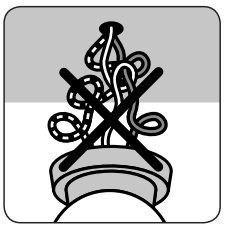

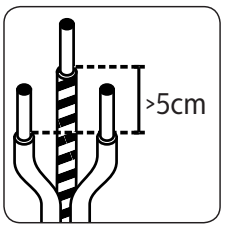

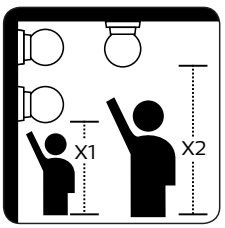

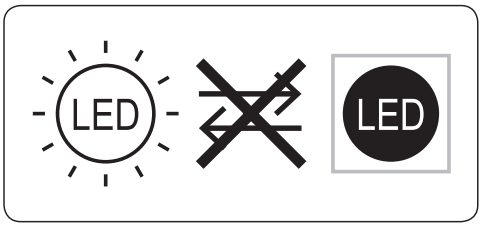

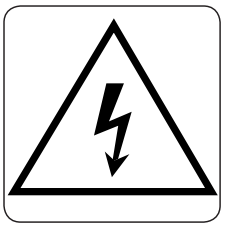

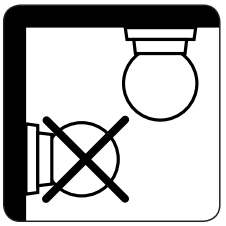

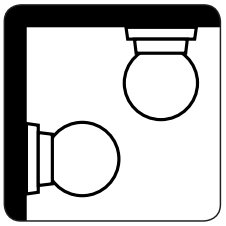

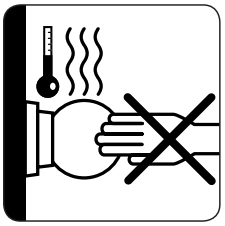

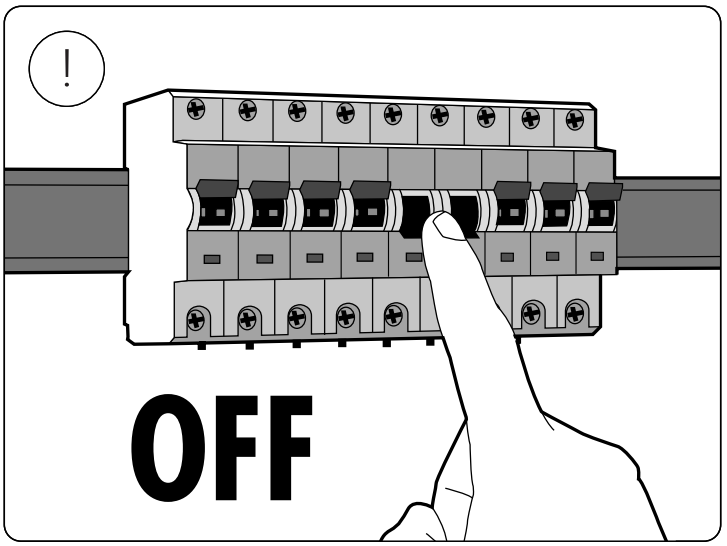
!
OFF

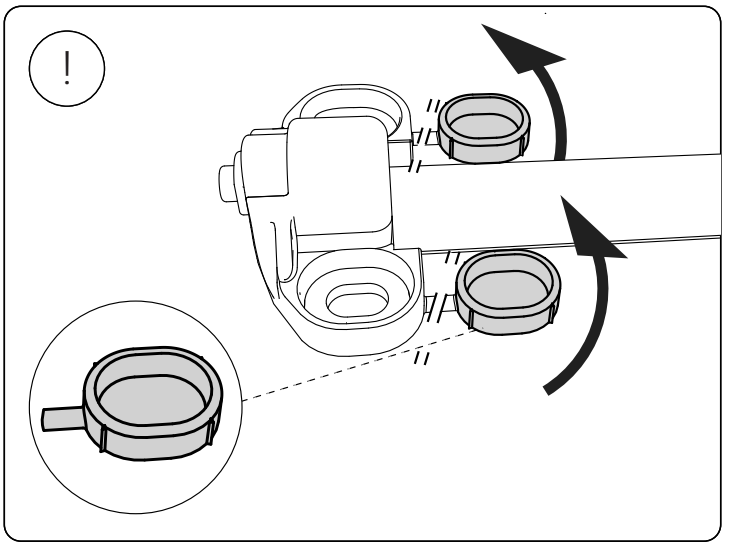
!

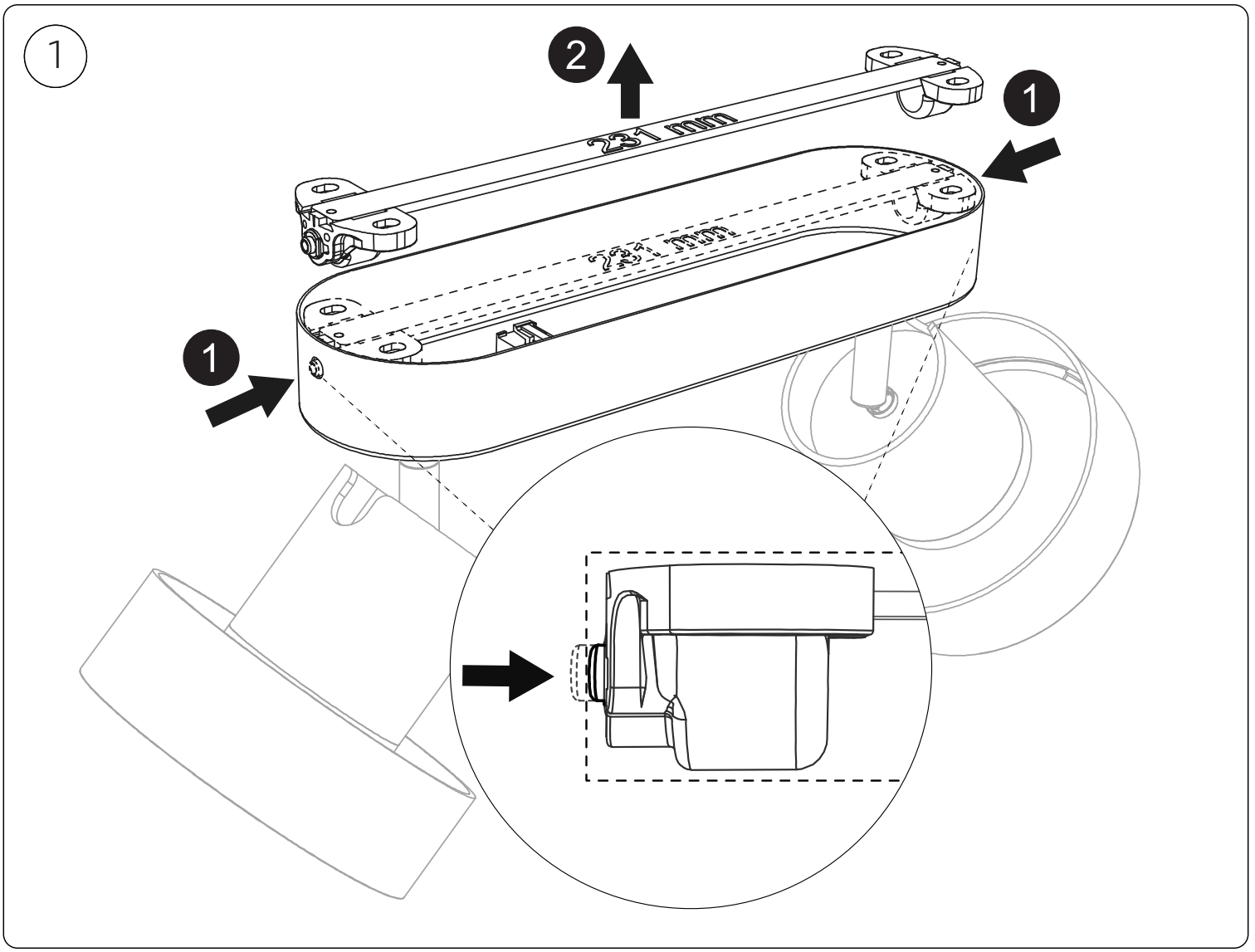
1
2
1
1
231 mm
231 mm

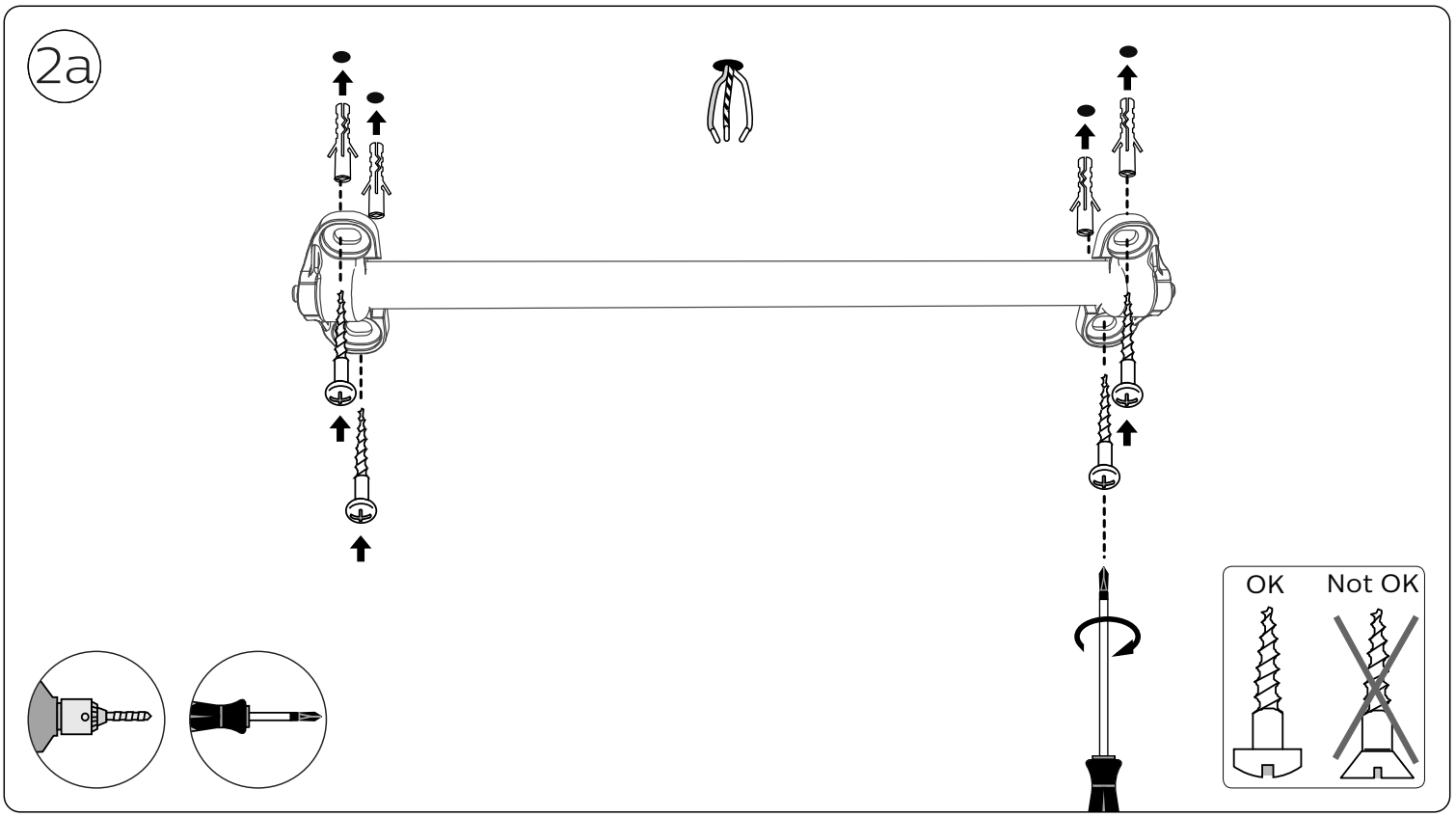
2a
OK
Not OK

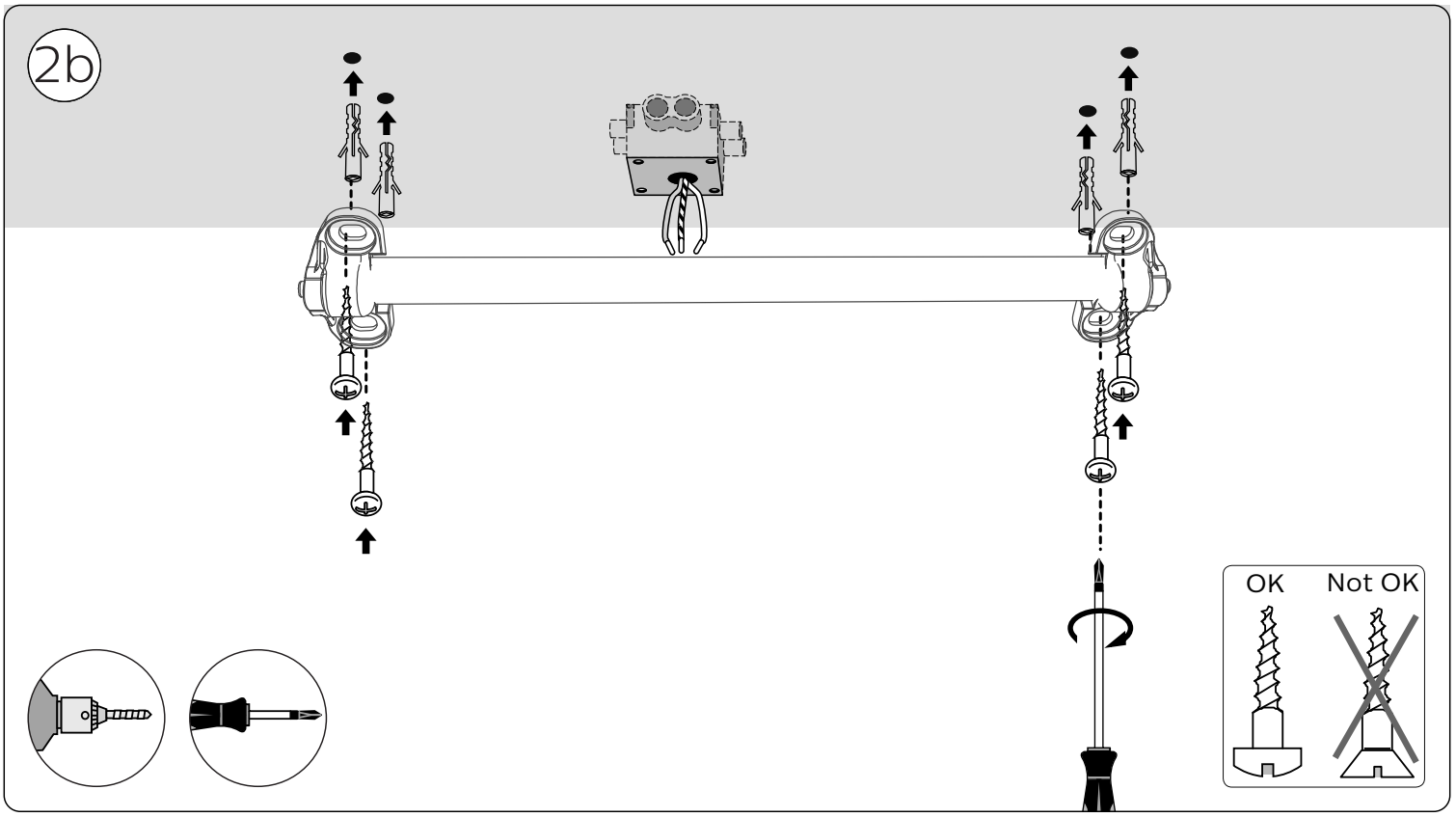
2b
OK
Not OK

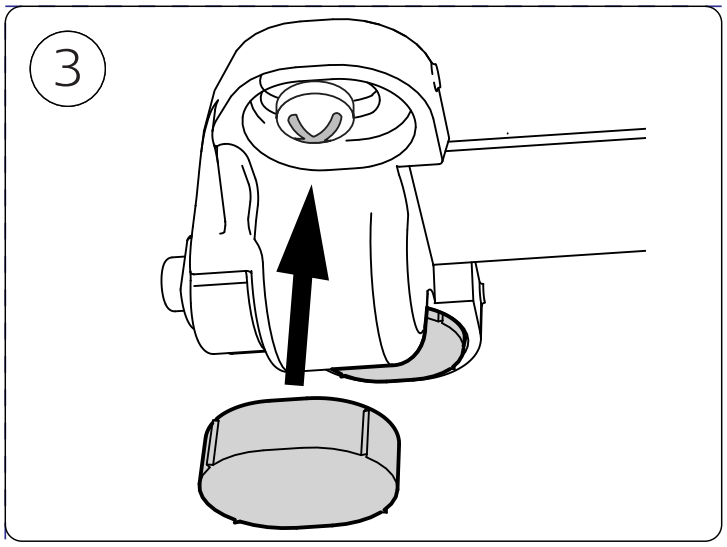
3

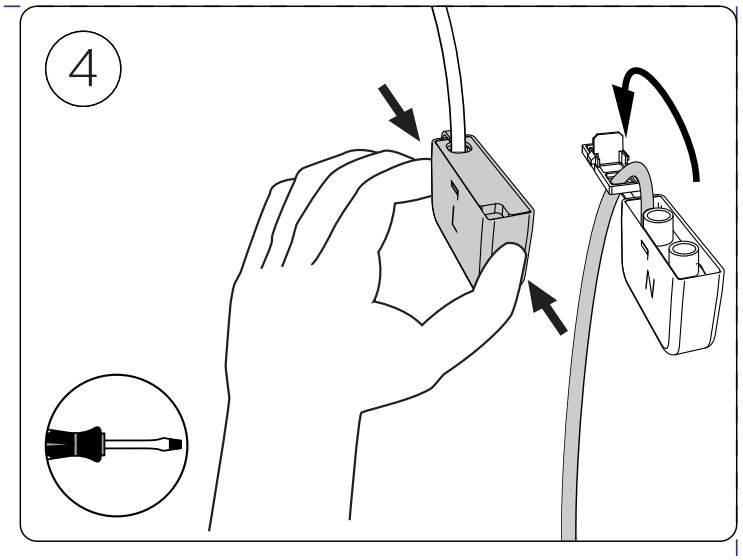
4
L
N

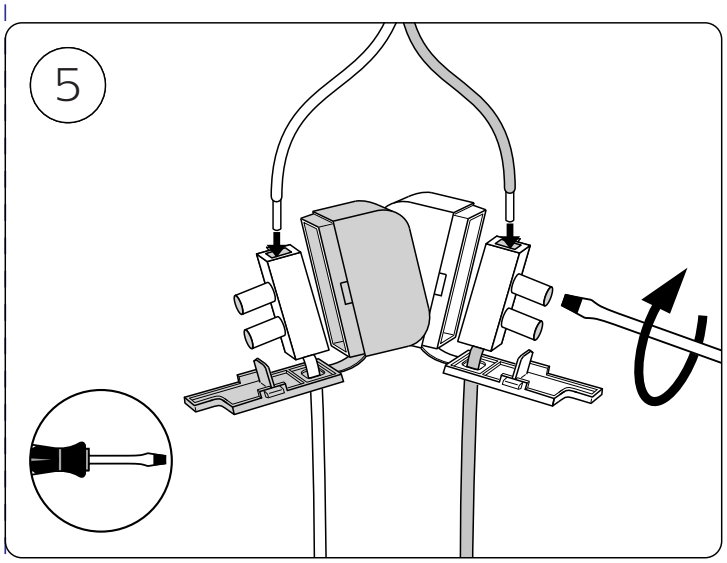
5

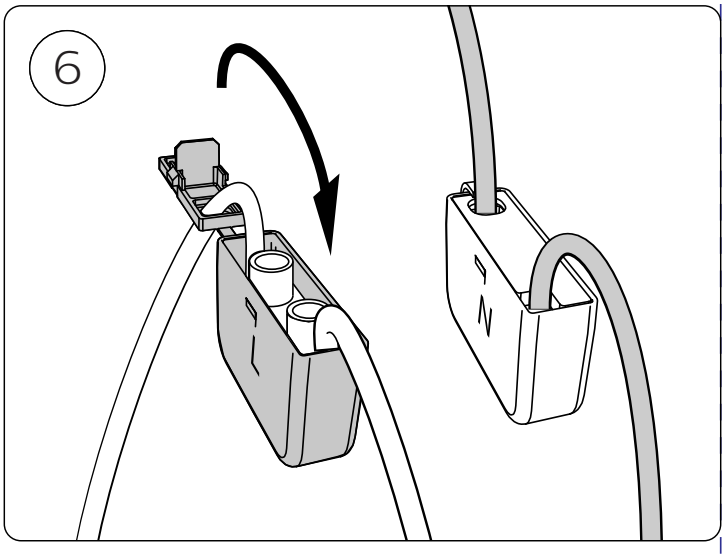
6
L
N

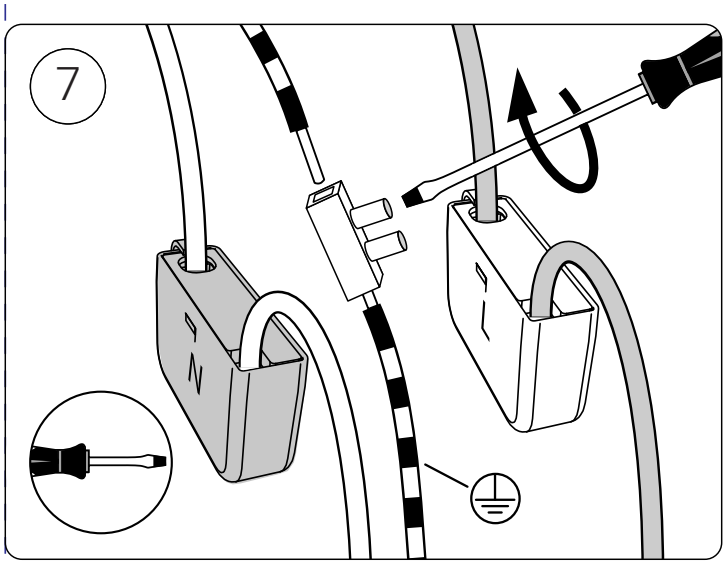
7
N
L

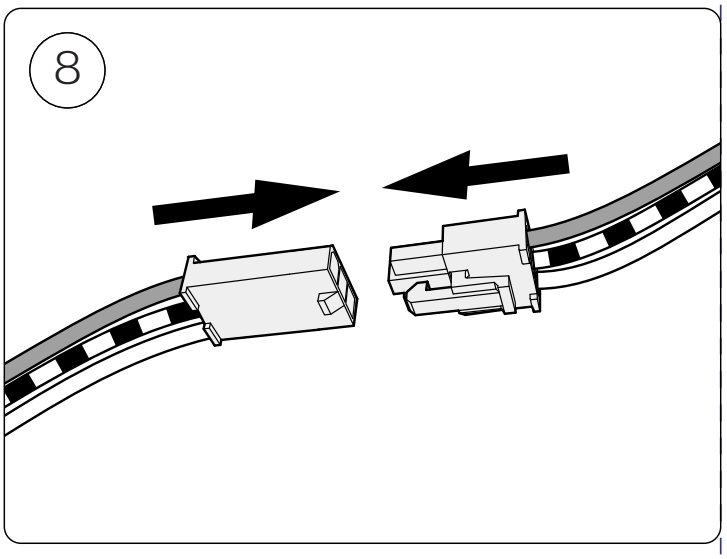
8

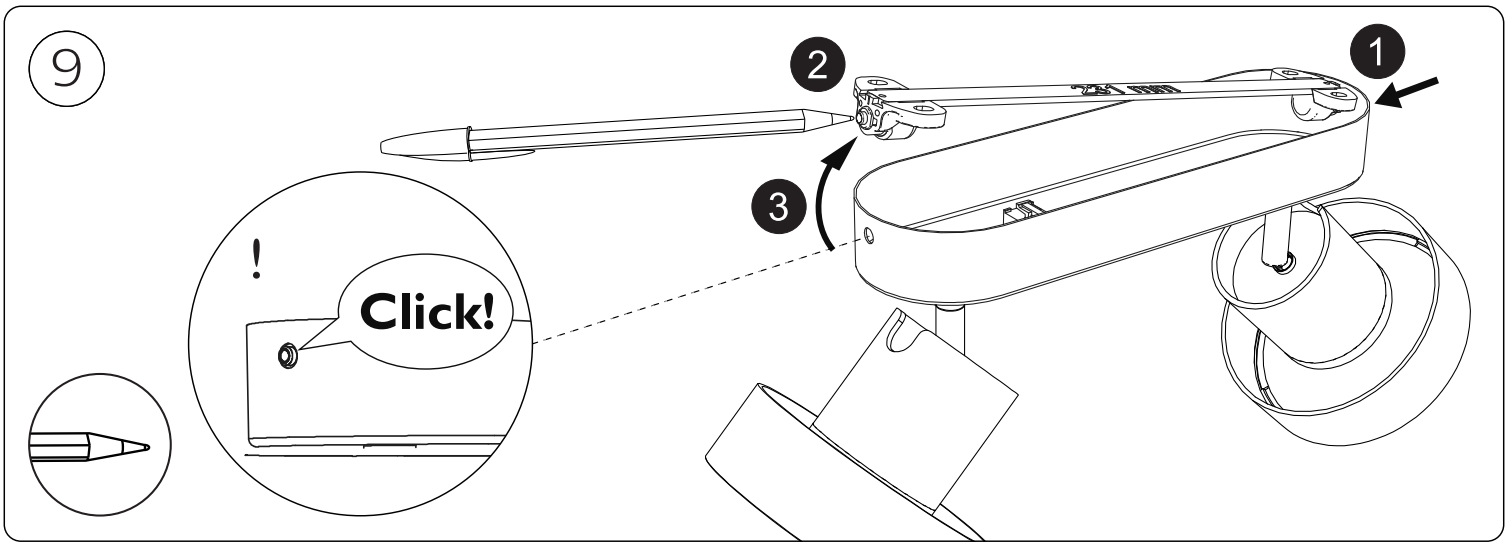
9
1
2
3
!
Click!

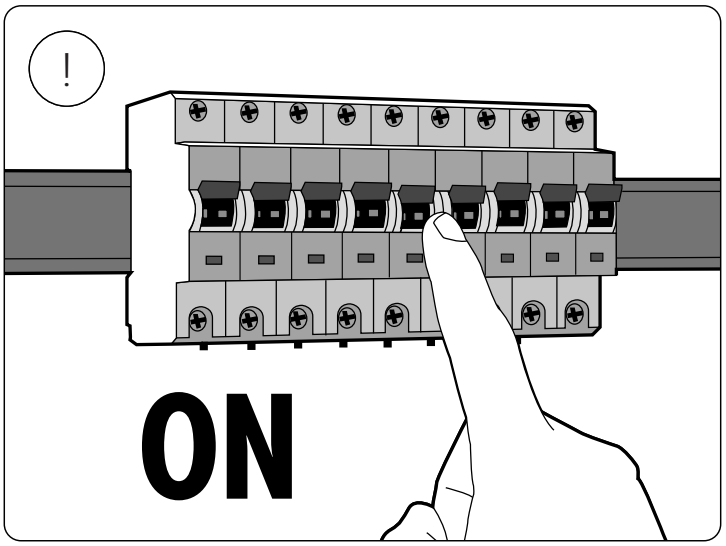
!
ON

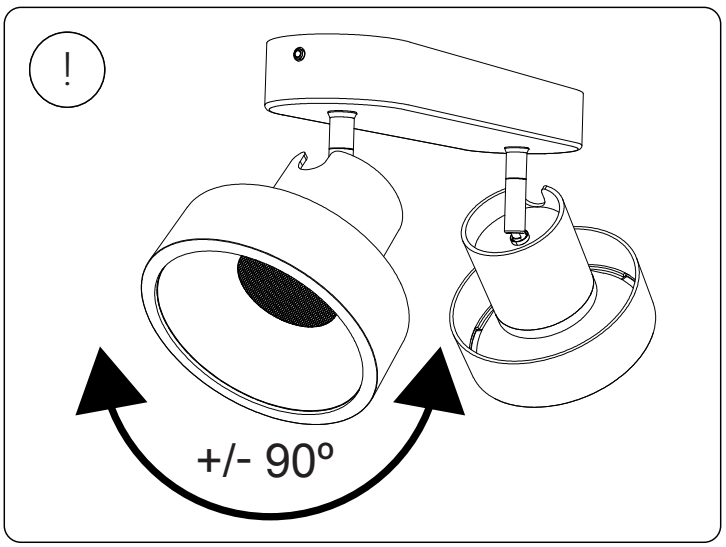
!
+/- 90º

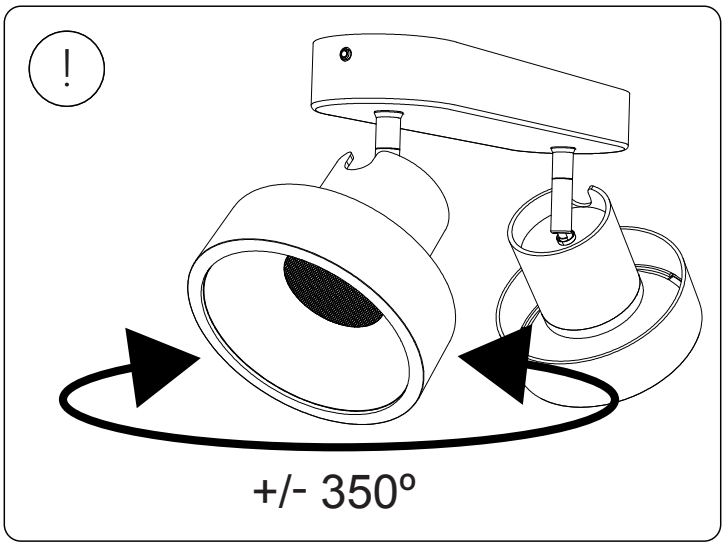
!
+/- 350º

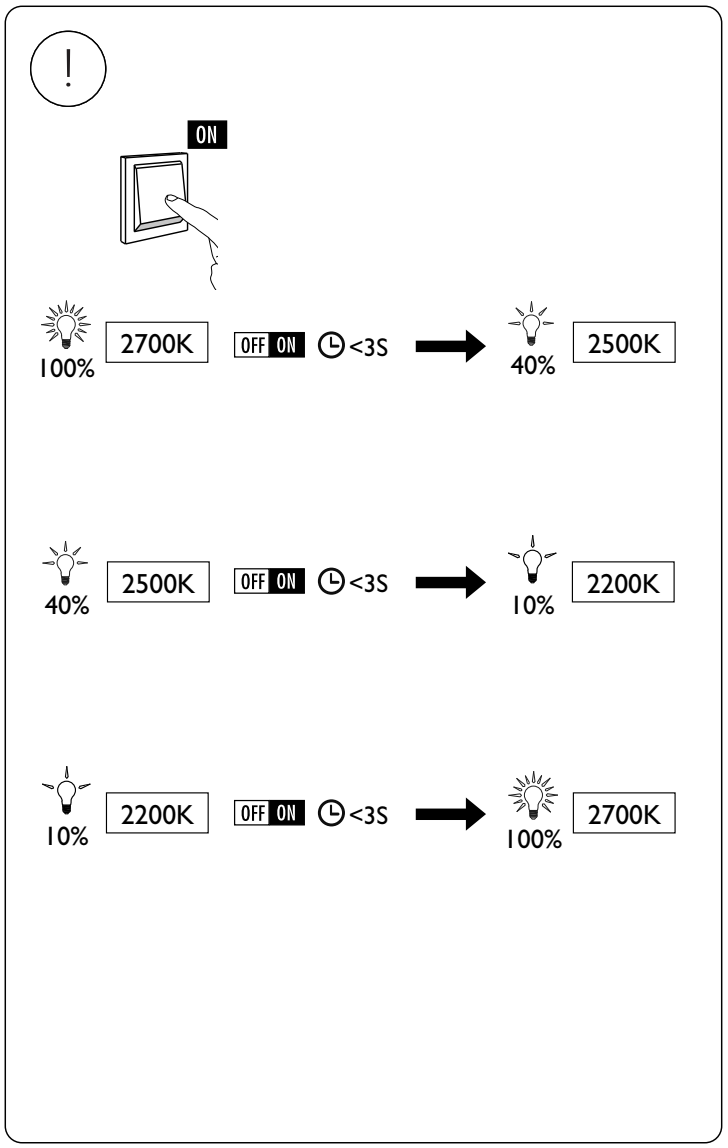
!
ON
100%
2700K
OFF ON
<3S
40%
2500K
40%
2500K
OFF ON
<3S
10%
2200K
10%
2200K
OFF ON
<3S
100%
2700K

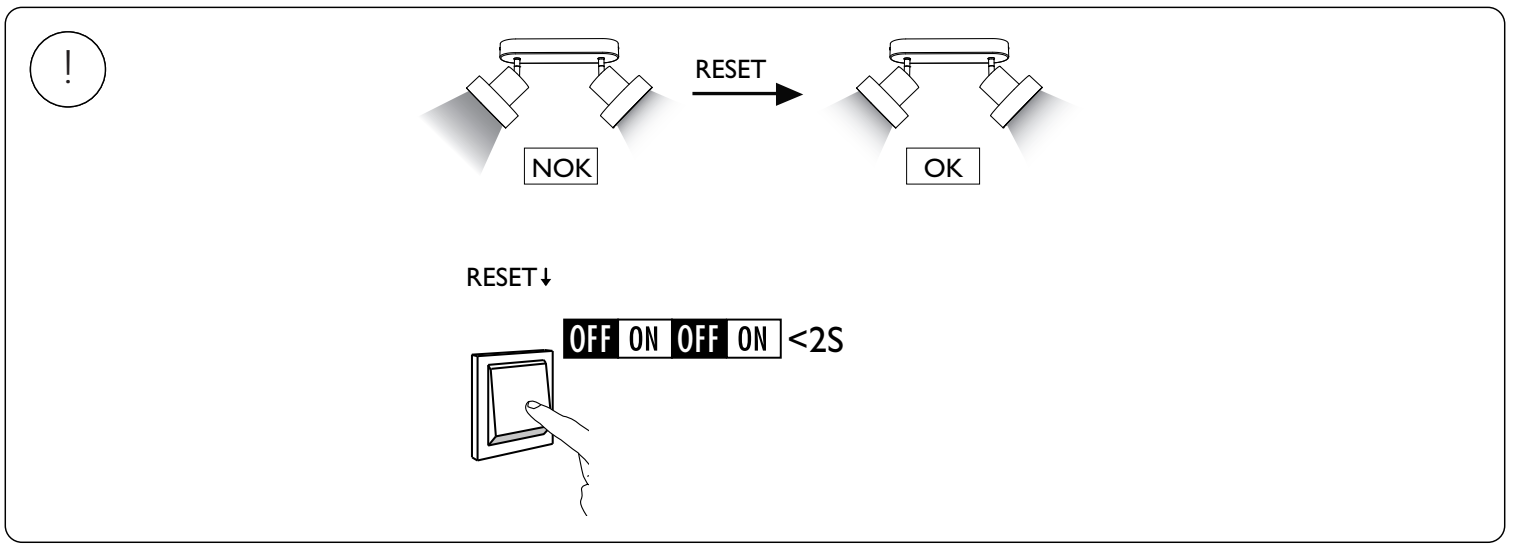
!
RESET
NOK
OK
RESET↓
OFF ON OFF ON
<2S

Signify
I.B.R.S. / C.C.R.I. Numéro 10461
5600 VB Eindhoven,
the Netherlands
✆00800-74454775

© 2020 Signify Holding
All rights reserved

www.philips.com/lighting

4404 029 10513
Last update: 10/2020