CASANOOV

EIGER 100P180

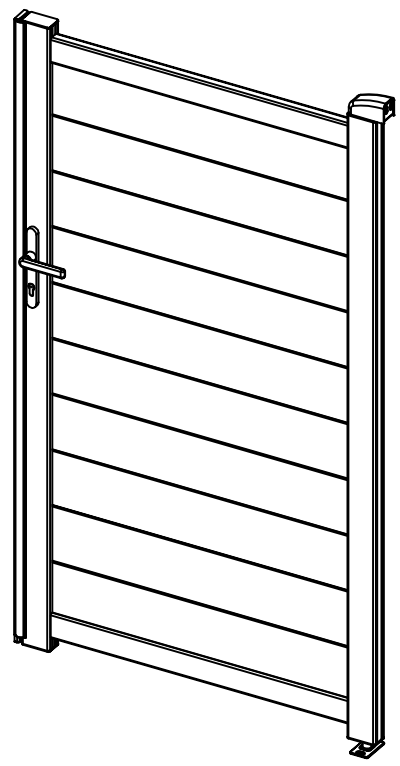

3-5H

x2

STI-000006 [x1]

FR EN ES DE IT NL PL CE

NOTICE DE MONTAGE / INSTRUCTION MANUAL / MANUAL DE MONTAJE / MONTAGEANLEITUNG / MANUALE DI MONTAGGIO / MONTAGEHANDLEIDING / INSTRUKCJA MONTAŻU

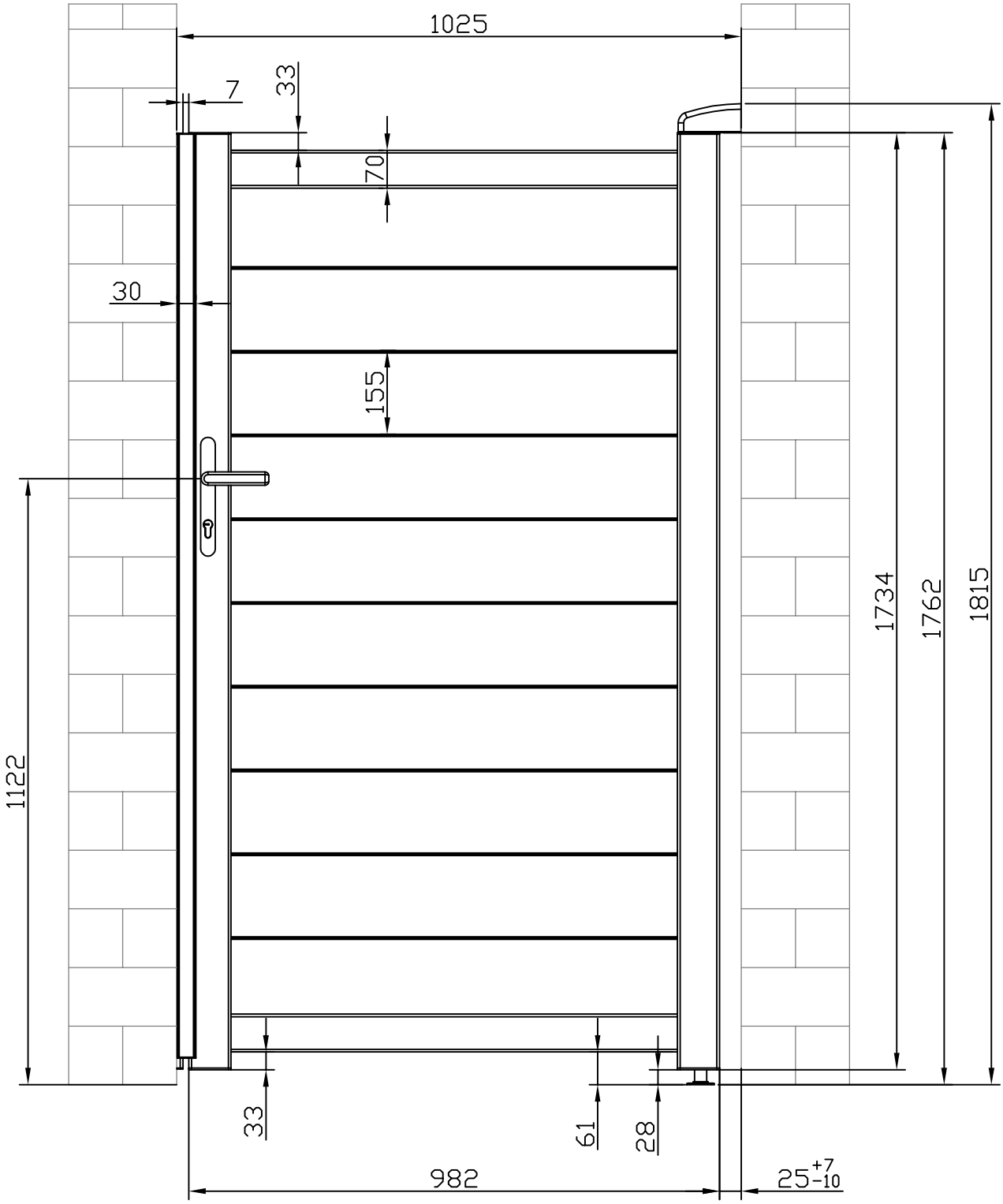
1025
7
33
70
30
155
1122
1734
1762
1815
33
61
28
982
25+7-10

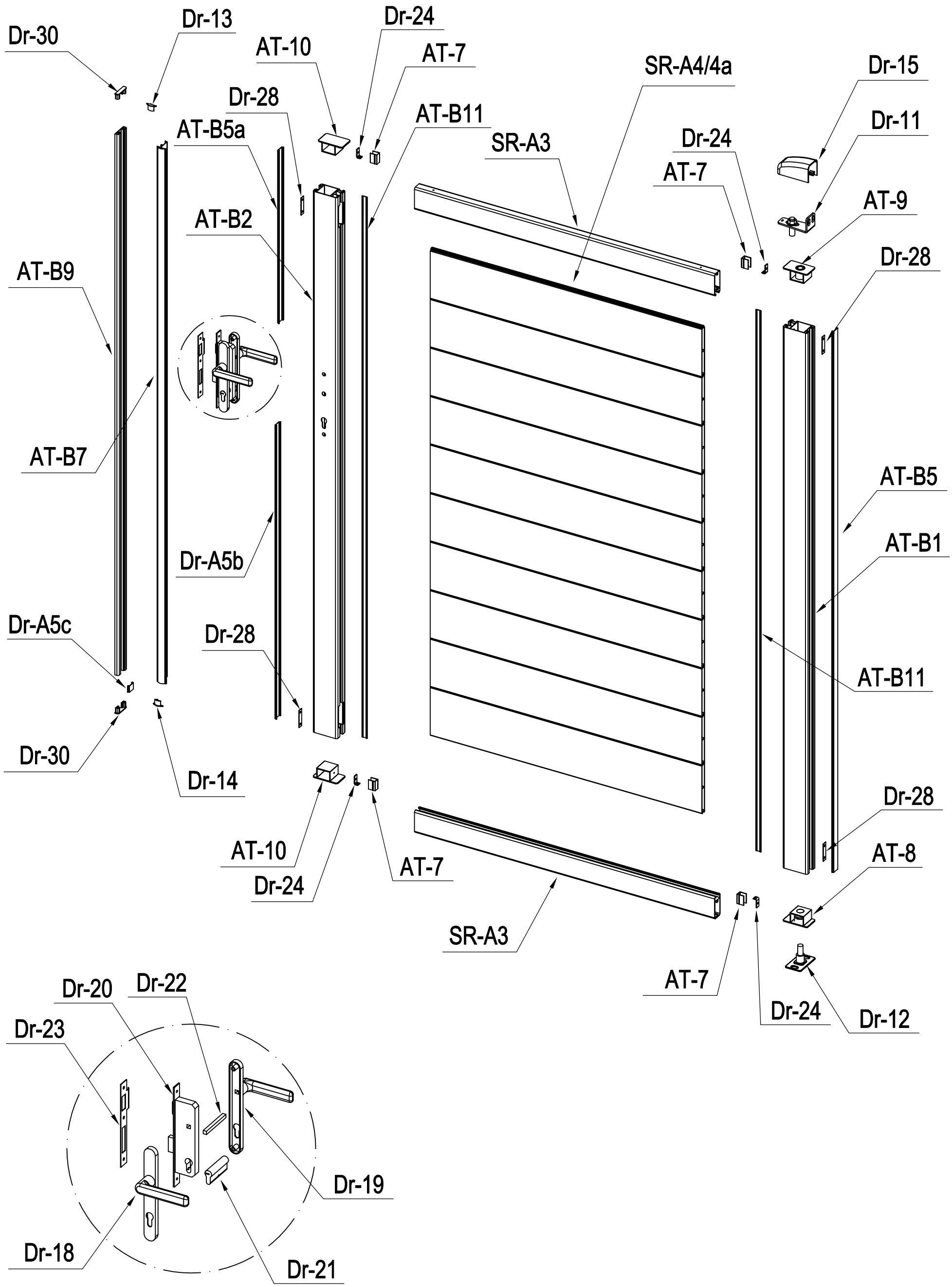
Dr-30
Dr-13
AT-10
Dr-24
AT-7
SR-A4/4a
Dr-15
Dr-28
AT-B5a
AT-B11
SR-A3
Dr-24
Dr-11
AT-7
AT-9
AT-B2
Dr-28
AT-B9
AT-B7
AT-B5
AT-B1
Dr-A5b
Dr-A5c
Dr-28
AT-B11
Dr-30
Dr-14
Dr-28
AT-10
AT-7
Dr-24
AT-8
SR-A3
AT-7
Dr-24
Dr-12
Dr-20
Dr-22
Dr-23
Dr-19
Dr-18
Dr-21

PART LIST

IMAGE	NO.	L.(mm)	QTY
	AT-B1	1728	1
	AT-B2	1728	1
	AT-B9	1728	1
	SR-A3	959	2
	SR-A4	868	9
	SR-A4a (+SR-A15)	868	1
	AT-B5	1728	1
	AT-B5a	550.5	1
	Dr-A5b	937	1
	Dr-A5c	19.5	1
	AT-B11	1728	2
	AT-7	29.5	4
	AT-B7	1708	1
	AT-8		1
	AT-9		1
	AT-10		2
	Dr-11		1
	Dr-12		1
	Dr-13		1
	Dr-14		1
	Dr-15		1

IMAGE	NO.	L.(mm)	QTY
	Dr-17		1
	Dr-30		2
	Dr-31		2
	Dr-18		1
	Dr-19		1
	Dr-20		1
	Dr-21		1
	Dr-22		1
	Dr-23		1
	Dr-24		4
	Dr-25		1
	Dr-25a		2
	Dr-26		3
	Dr-27		2
	CK-C30		4
	CK-C31		4
	CK-C32		6
	CK-C33		8
	CK-C34		3
	CK-C35		40
	Dr-28		4

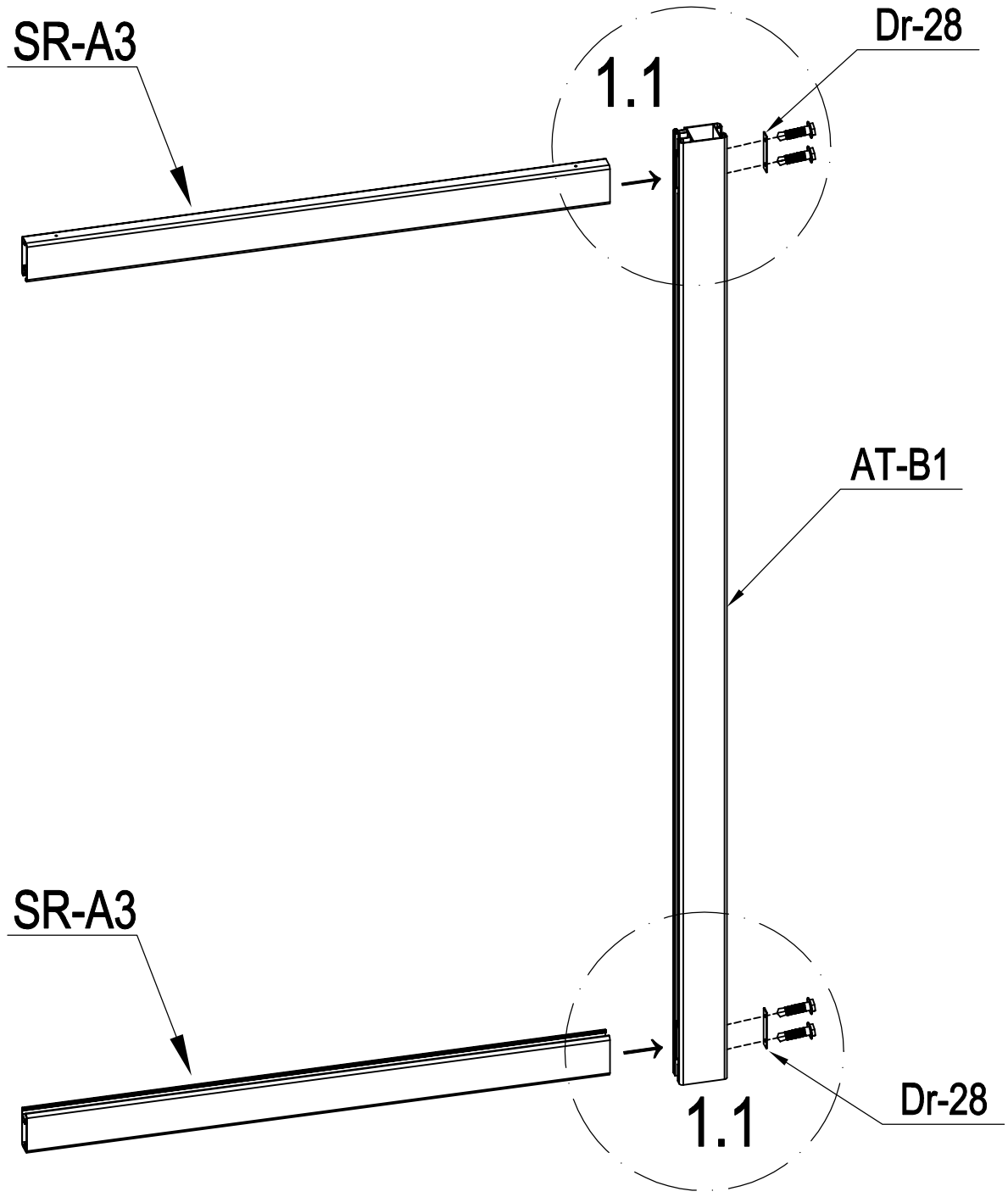

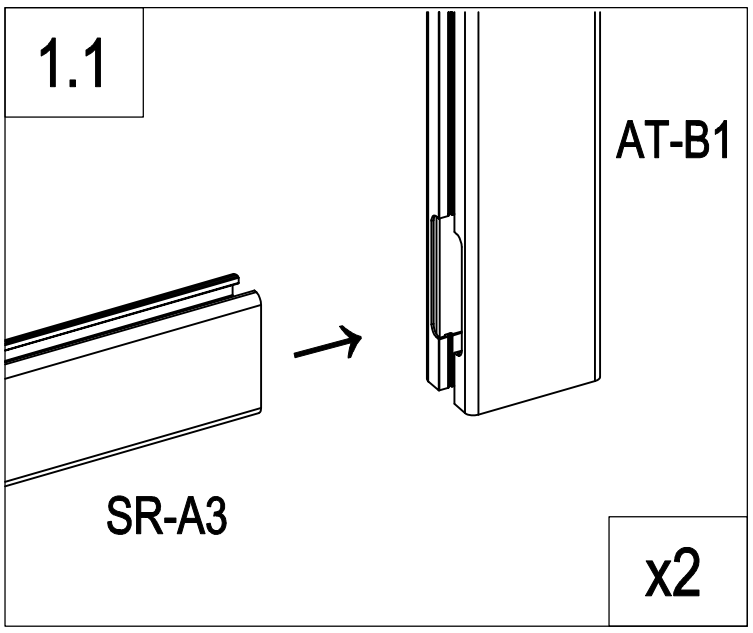

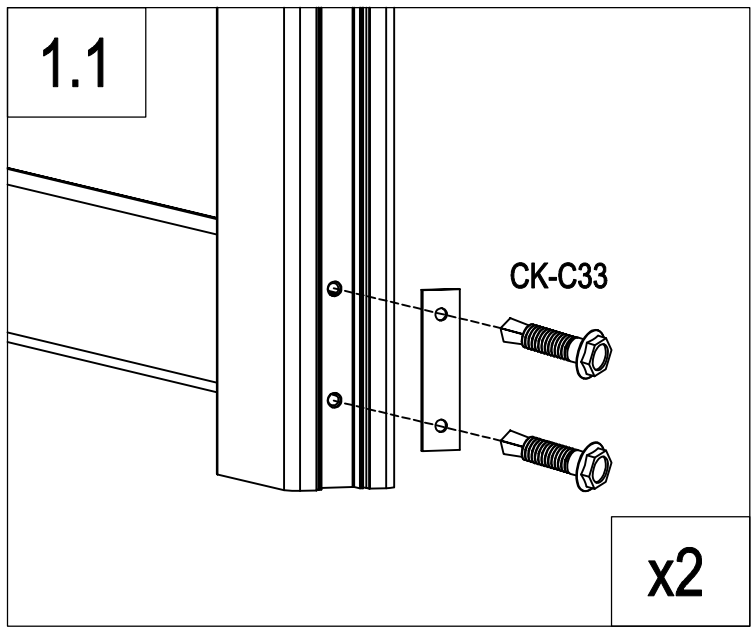

	AT-B1	1
	SR-A3	2
	Dr-28	2
	CK-C33	4

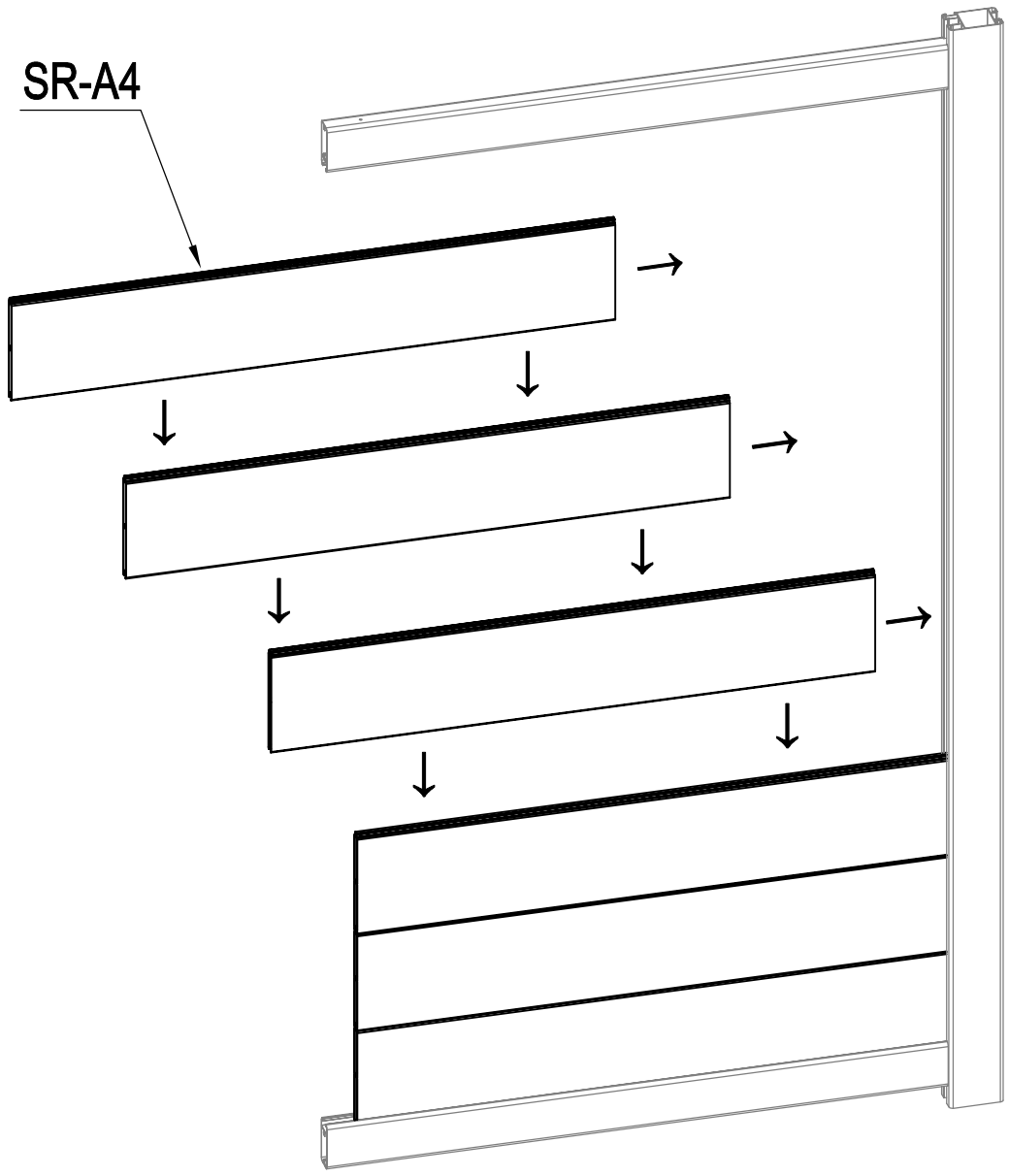

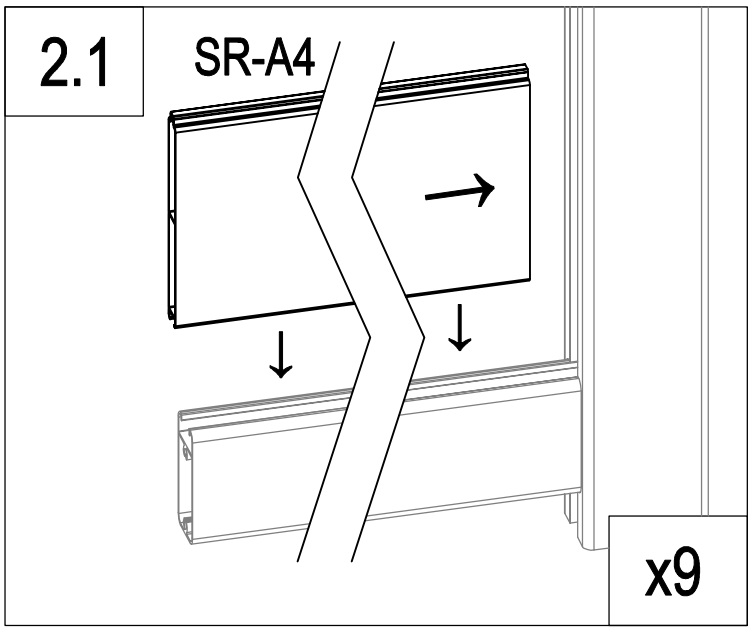

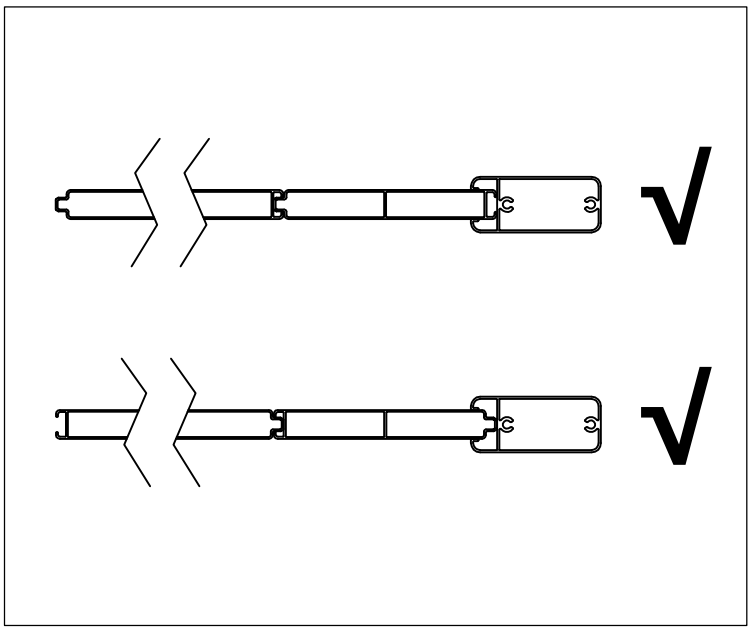

	SR-A4	9

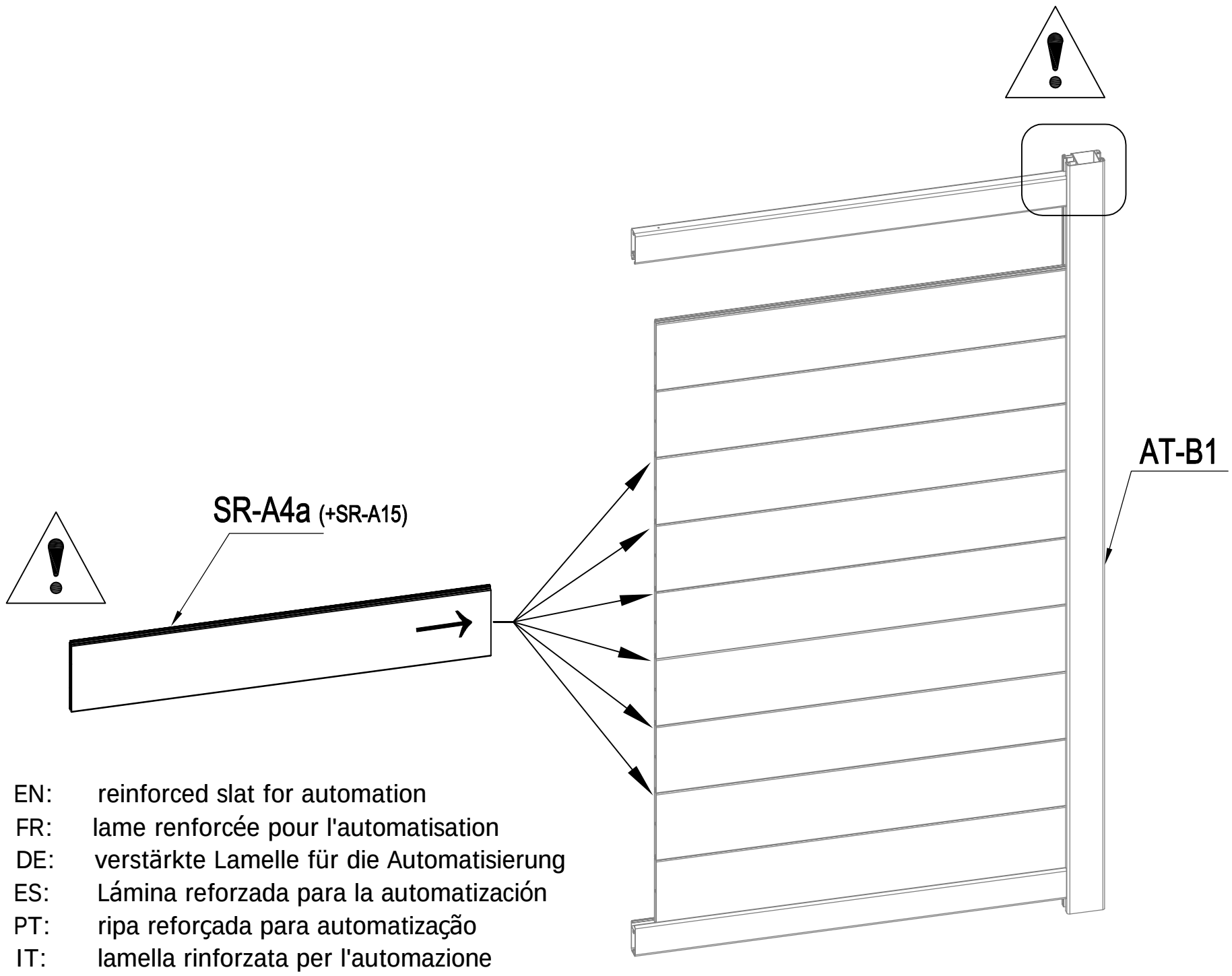

EN: reinforced slat for automation
FR: lame renforcée pour l'automatisation
DE: verstärkte Lamelle für die Automatisierung
ES: Lámina reforzada para la automatización
PT: ripa reforçada para automatização
IT: lamella rinforzata per l'automazione
NL: versterkte lat voor automatisering
PL: wzmocniona listwa do automatyzacji

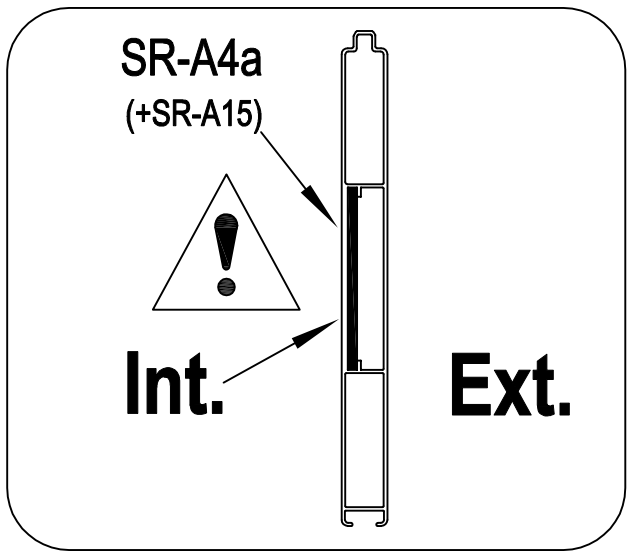

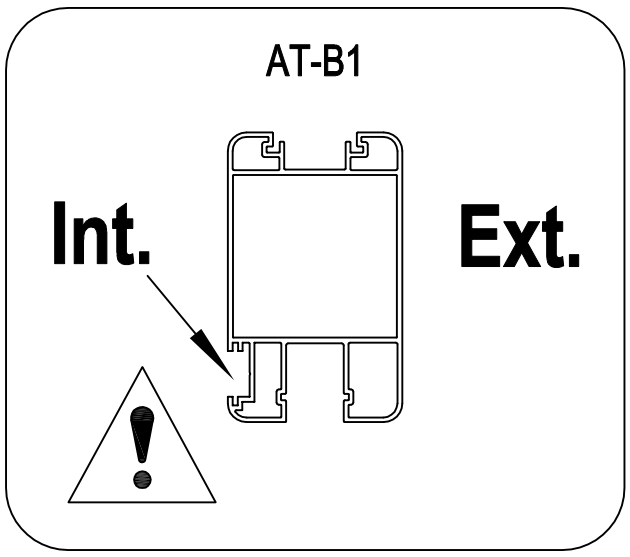

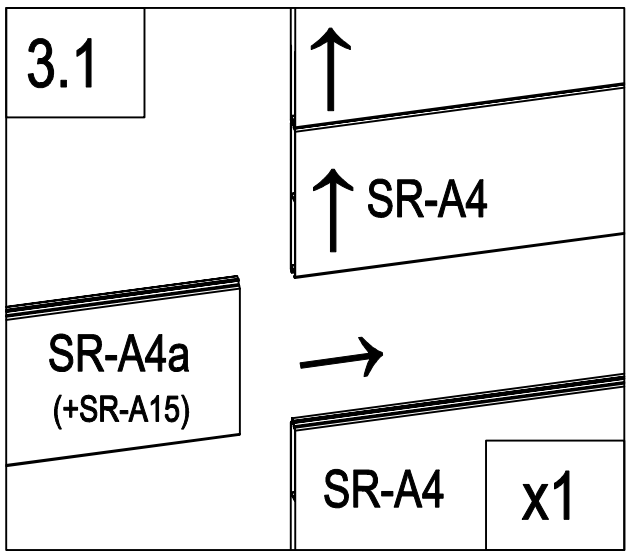

	SR-A4a (+SR-A15)	1

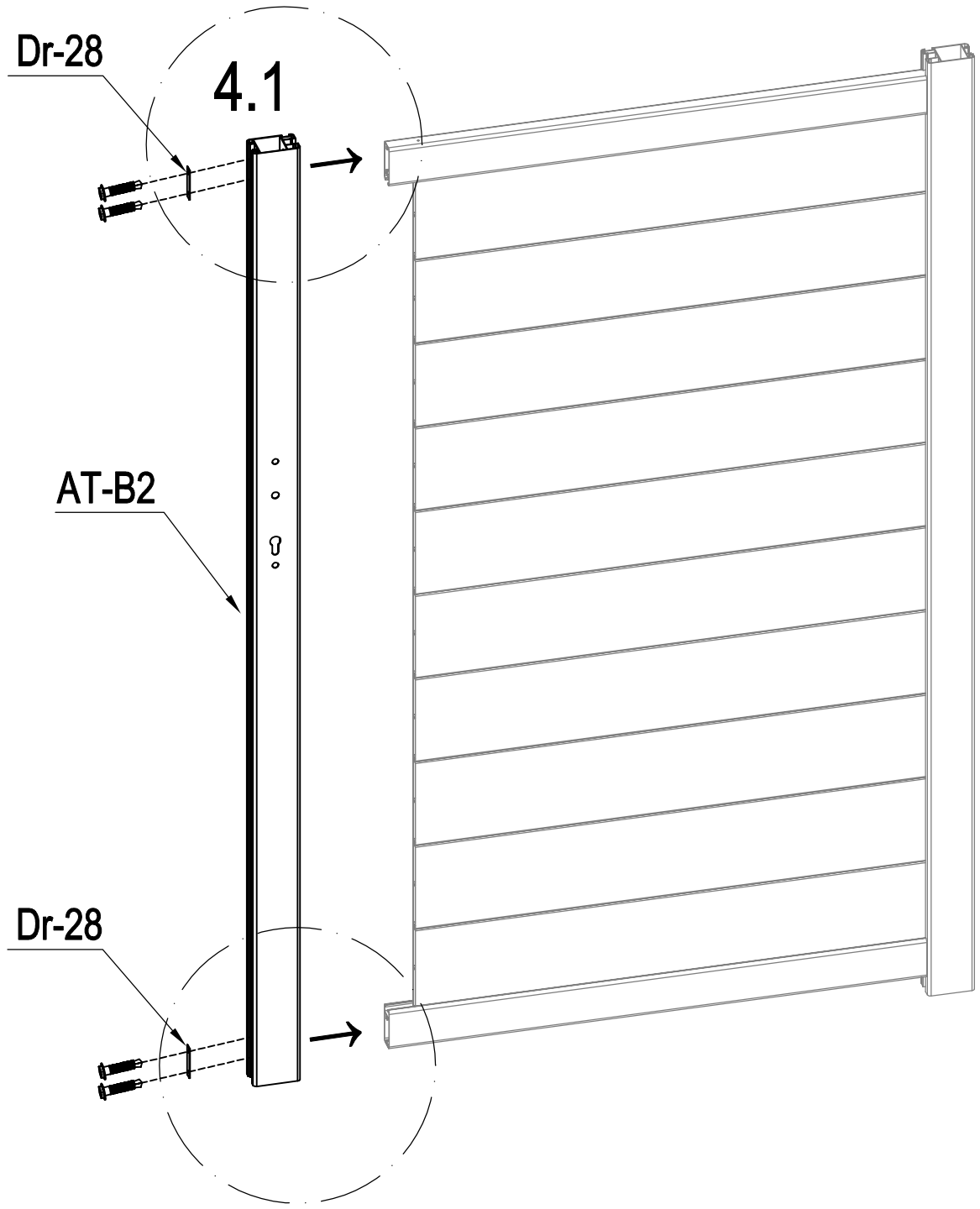

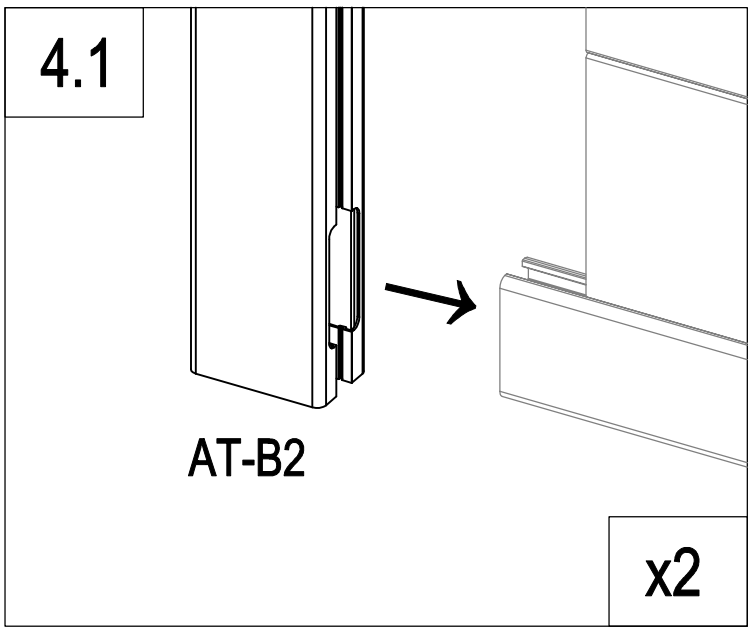

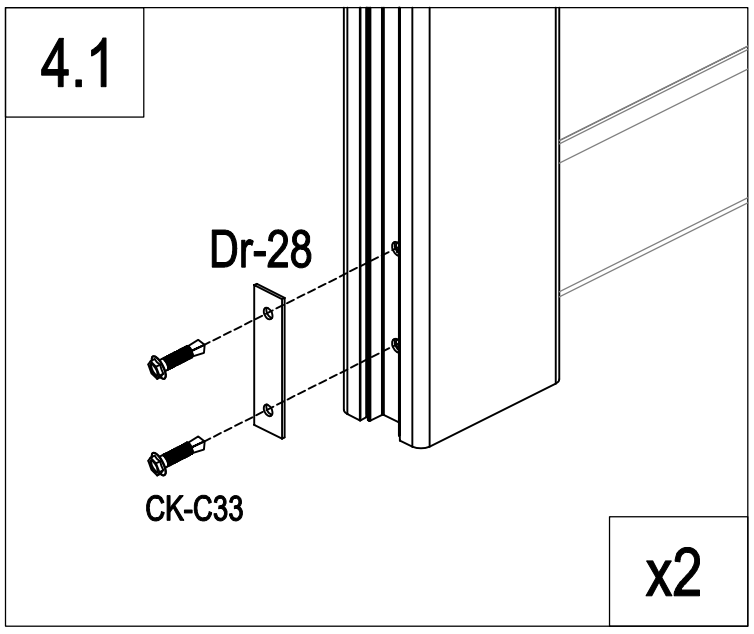

	AT-B2	1
	Dr-28	2
	CK-C33	4

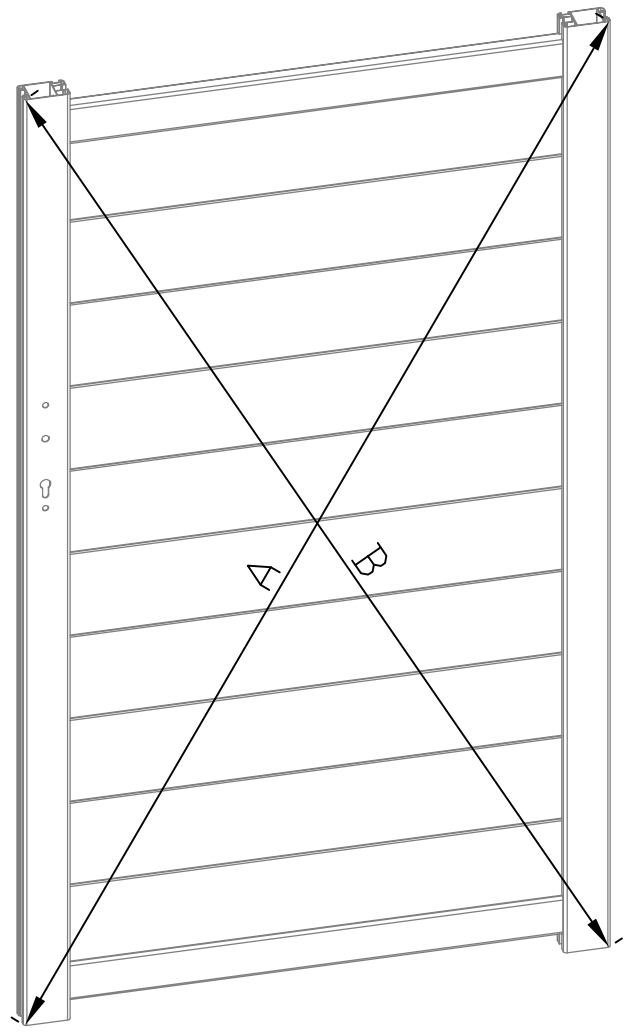

A=B

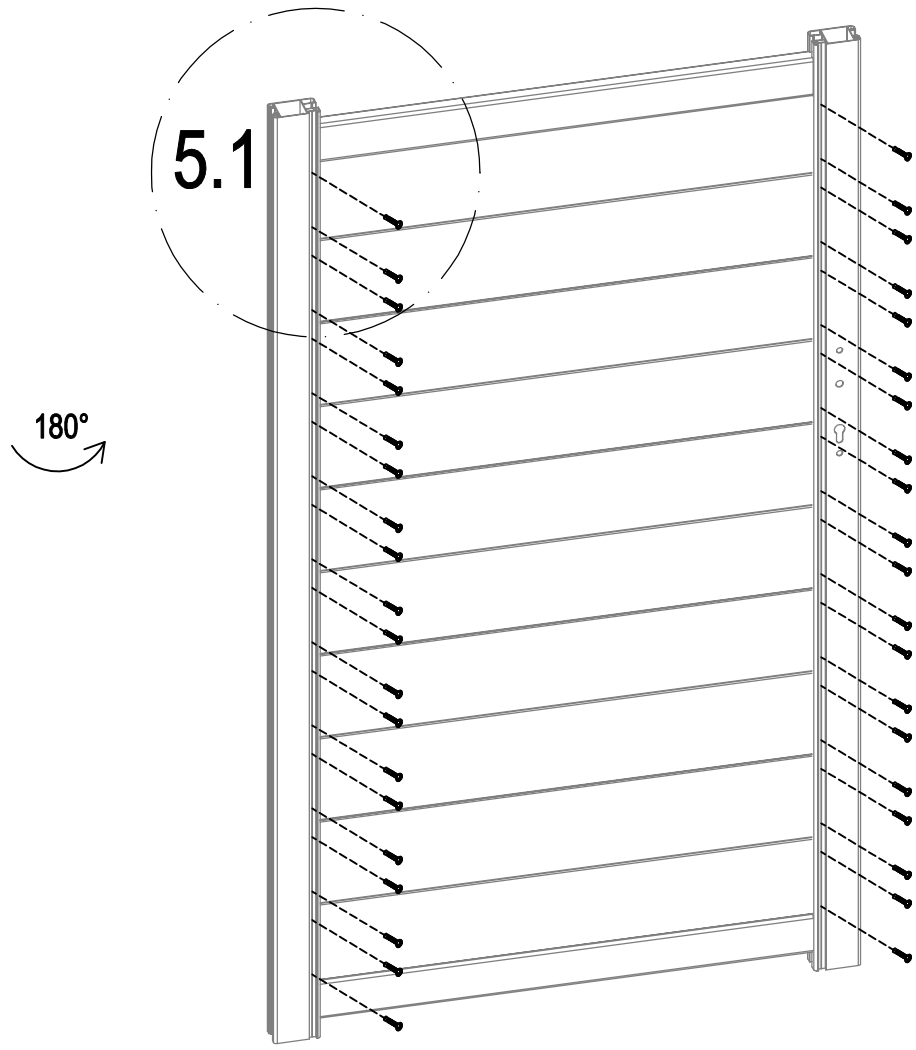

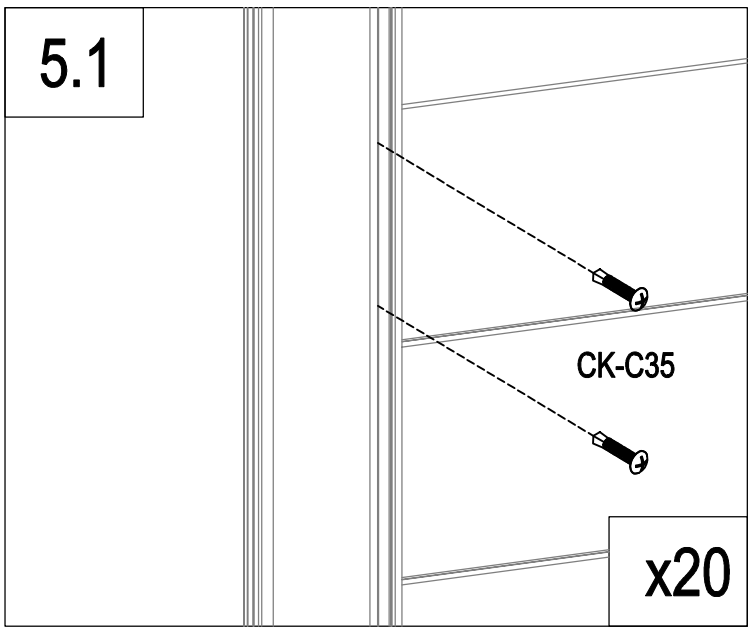

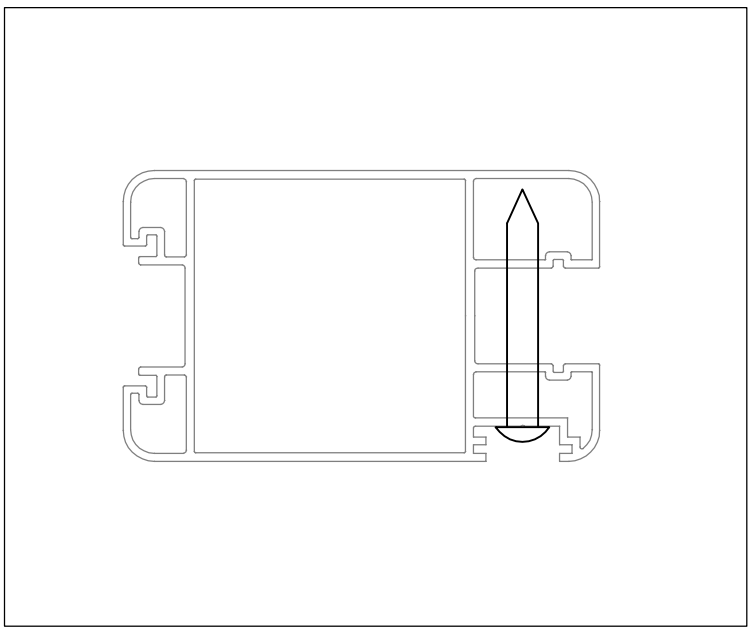

	CK-C35	40

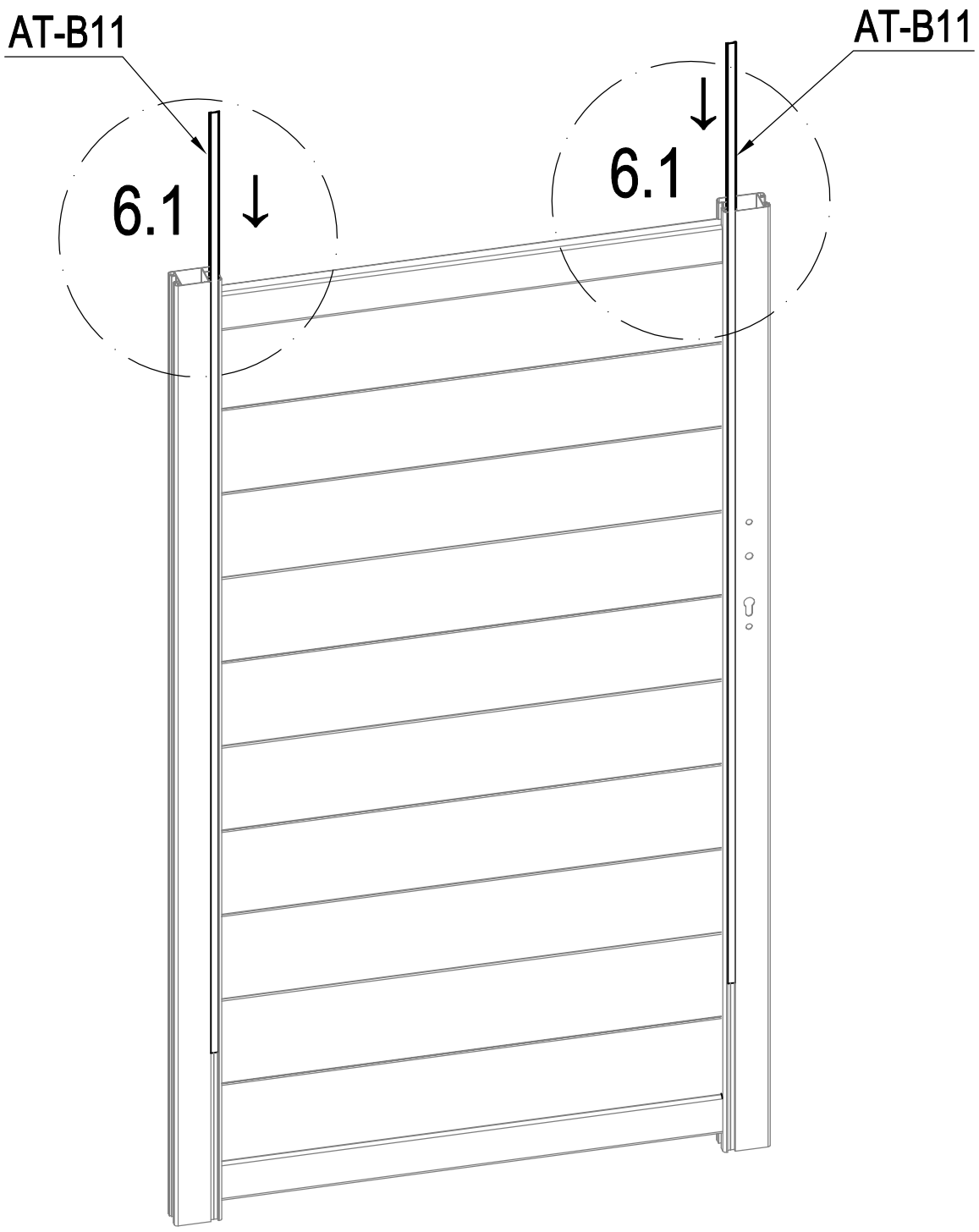

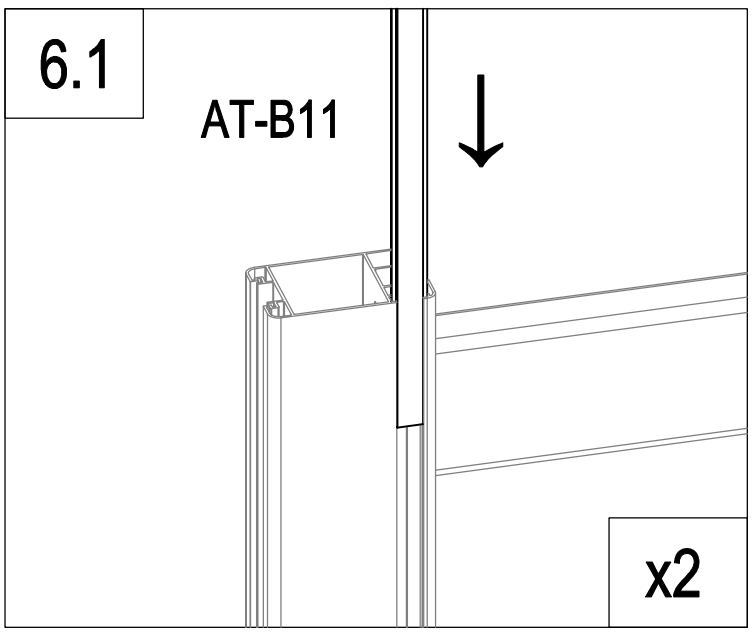

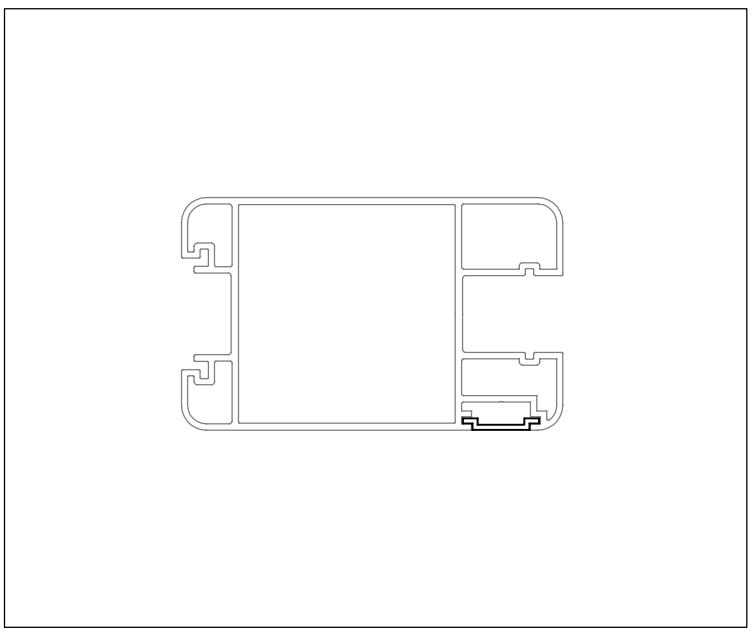

	AT-B11	2

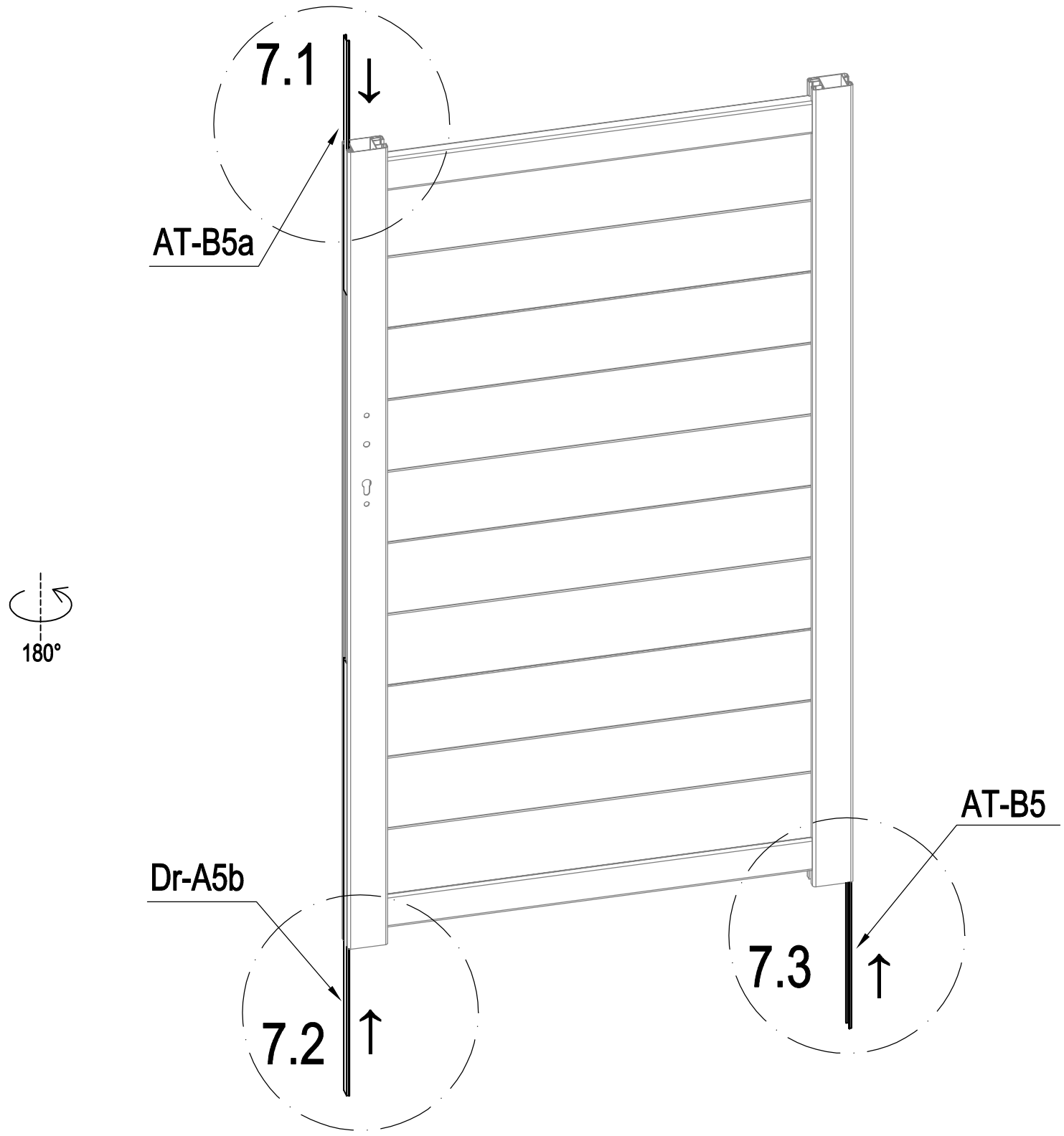

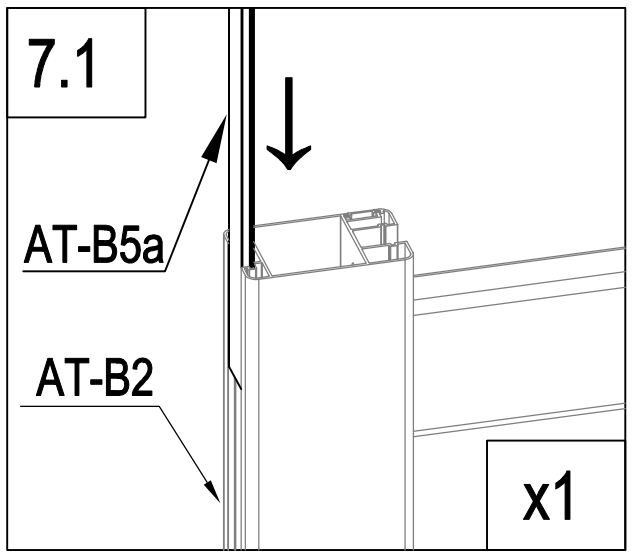

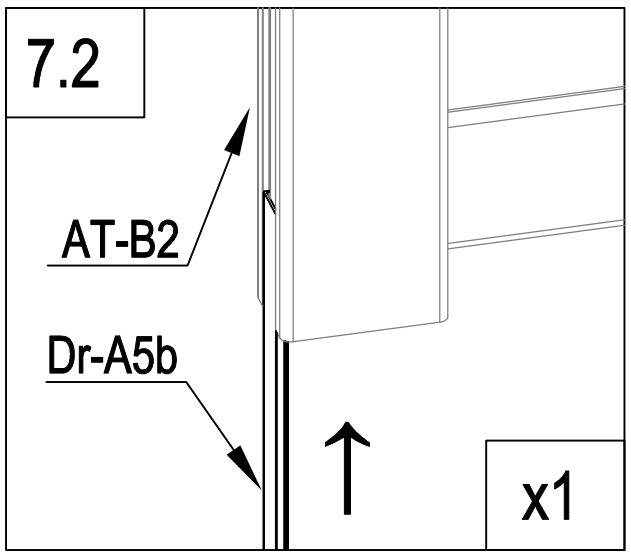

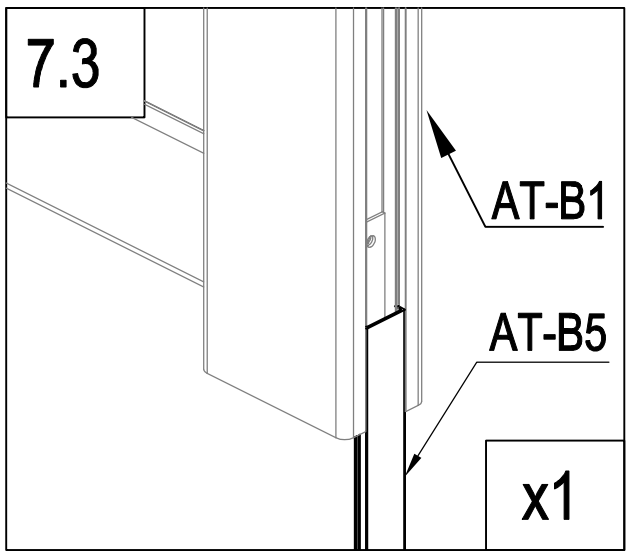

	AT-B5	1
	AT-B5a	1
	Dr-A5b	1

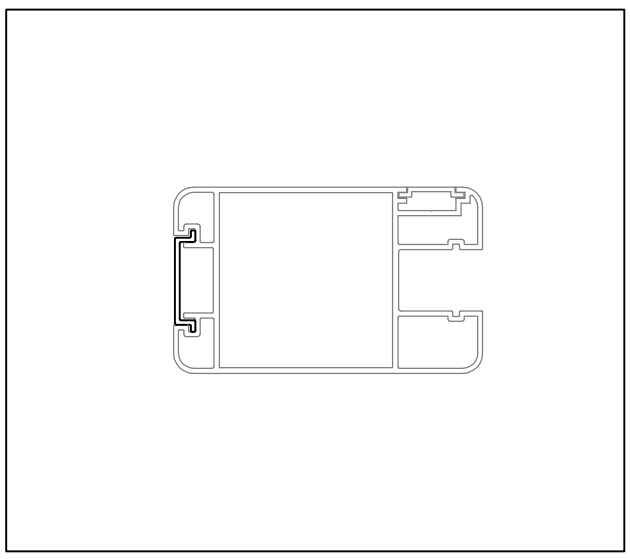

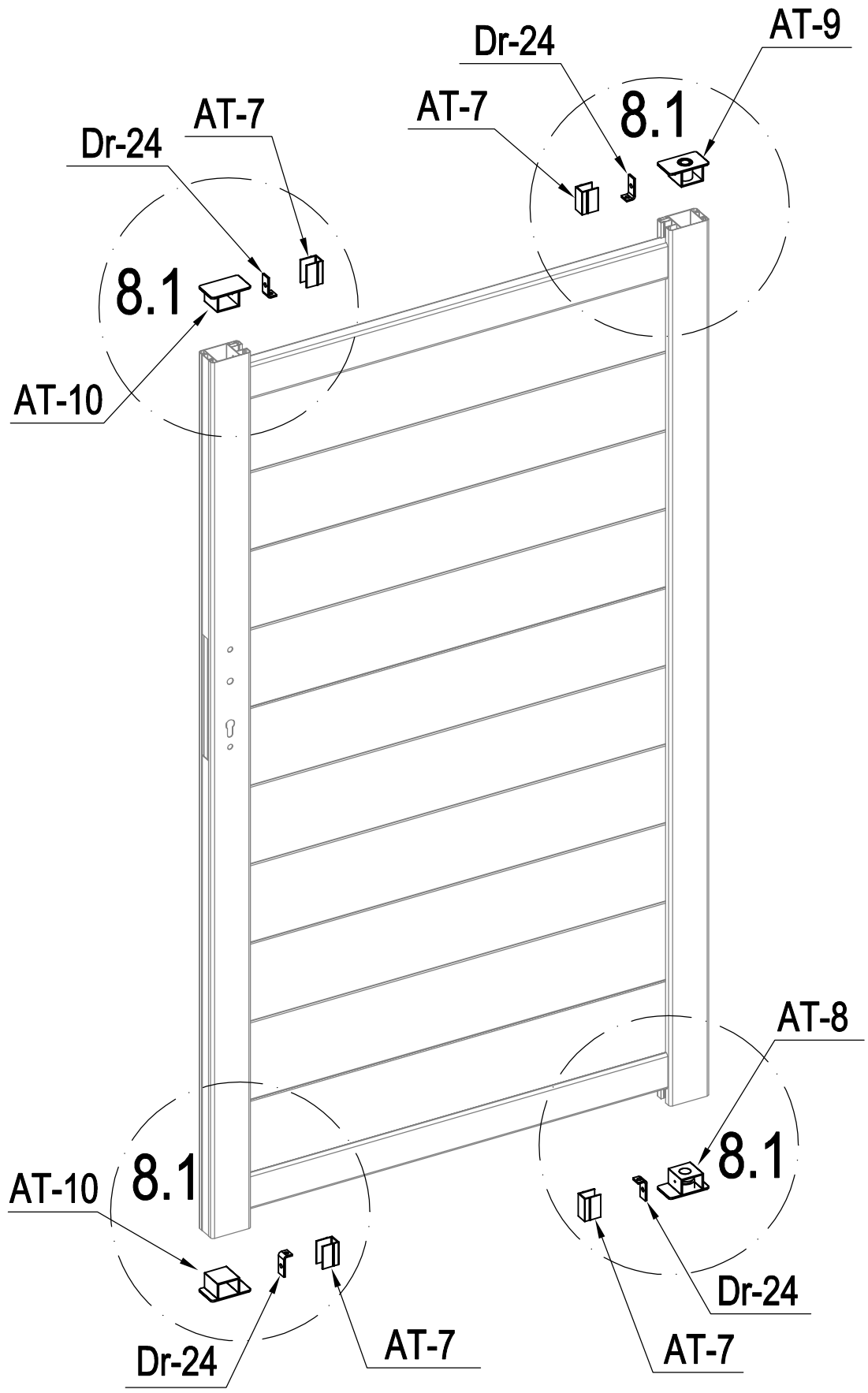

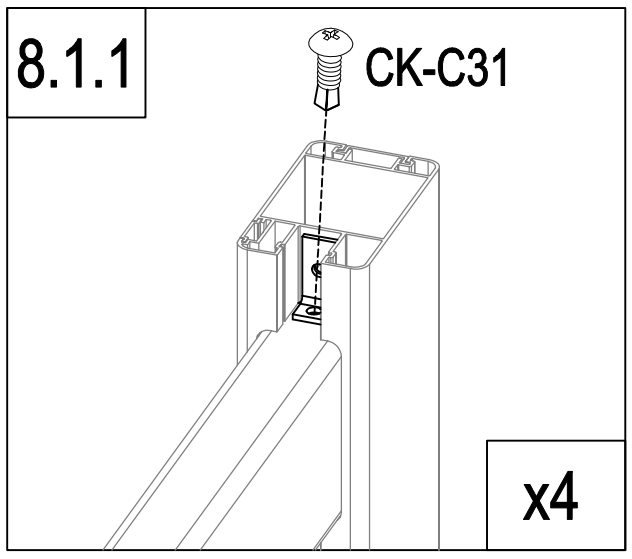

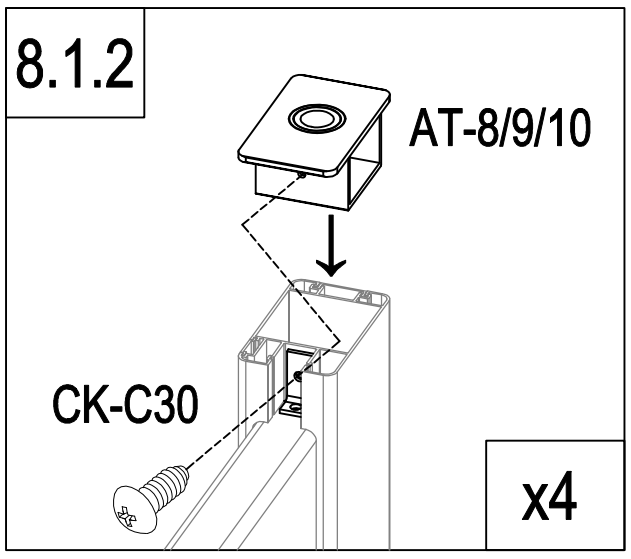

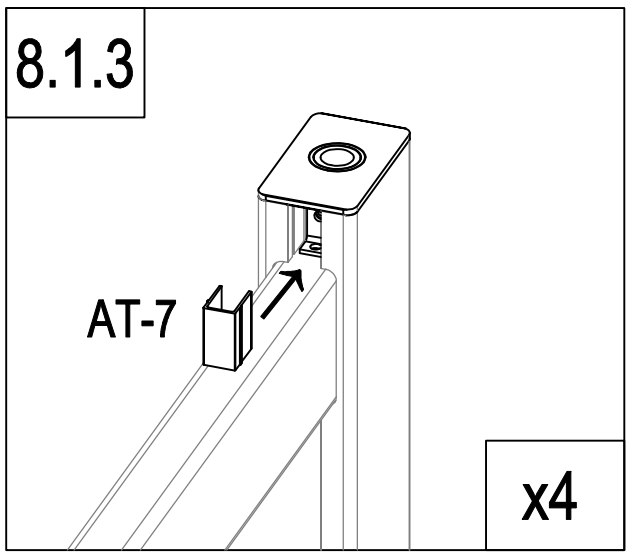

	AT-8	1
	AT-9	1
	AT-10	2
	Dr-24	4

	AT-7	4
	CK-C30	4
	CK-C31	4

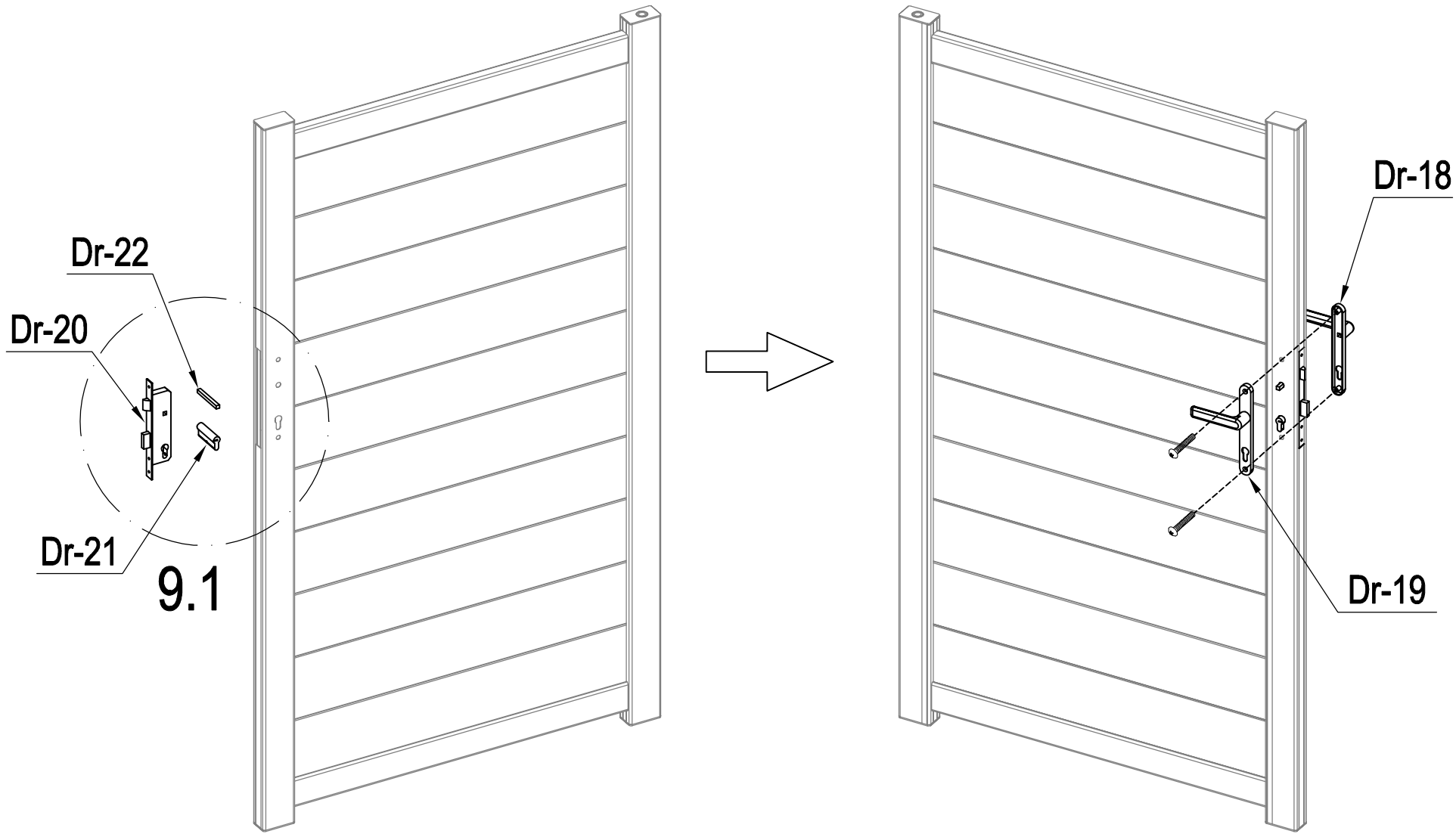

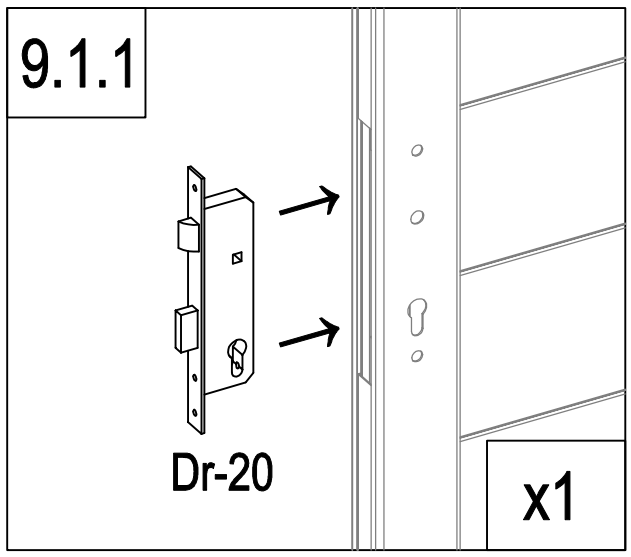

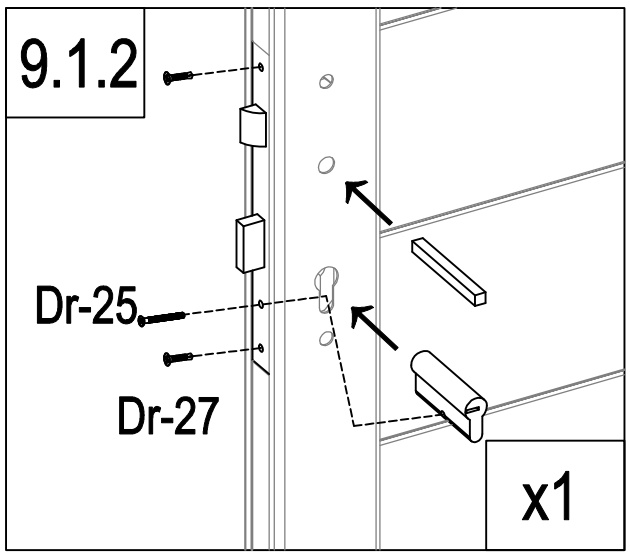

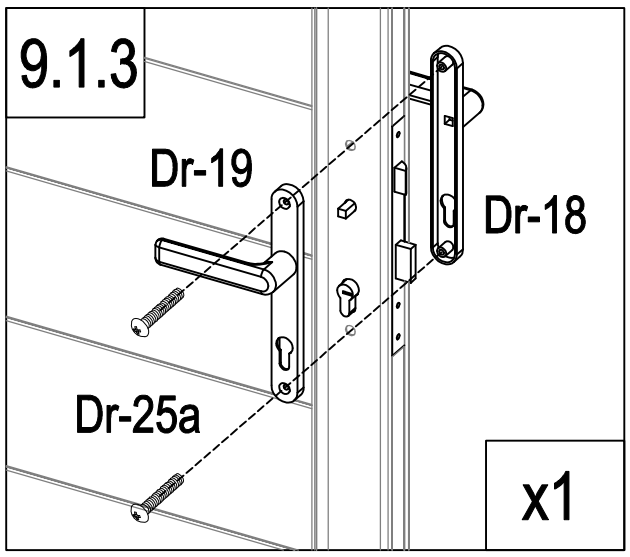

	Dr-20	1
	Dr-21	1
	Dr-22	1
	Dr-25	1

	Dr-18	1
	Dr-19	1
	Dr-25a	2
	Dr-27	2

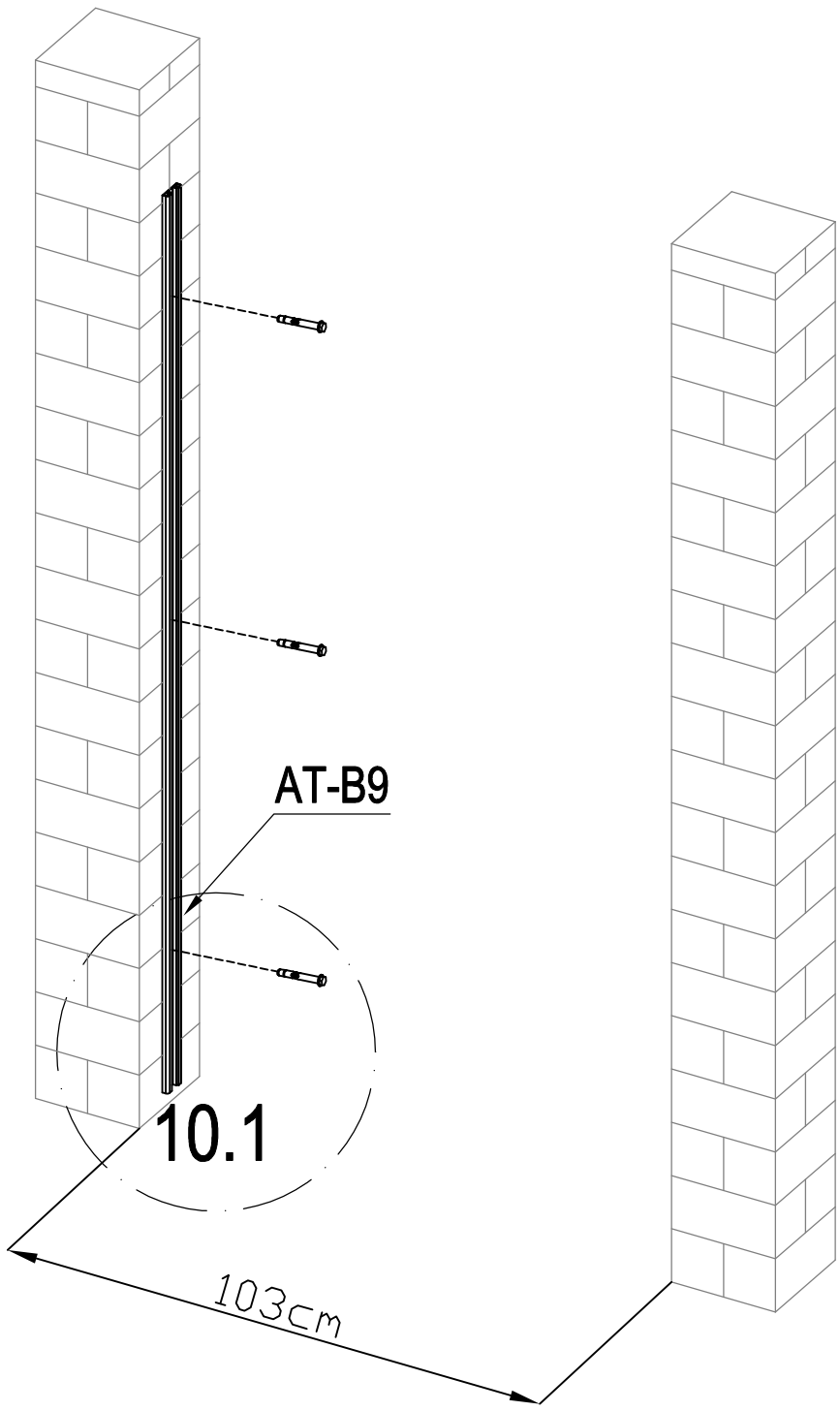

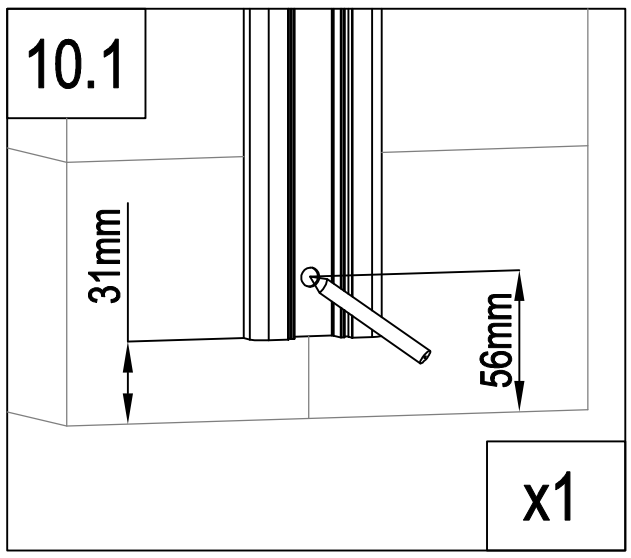

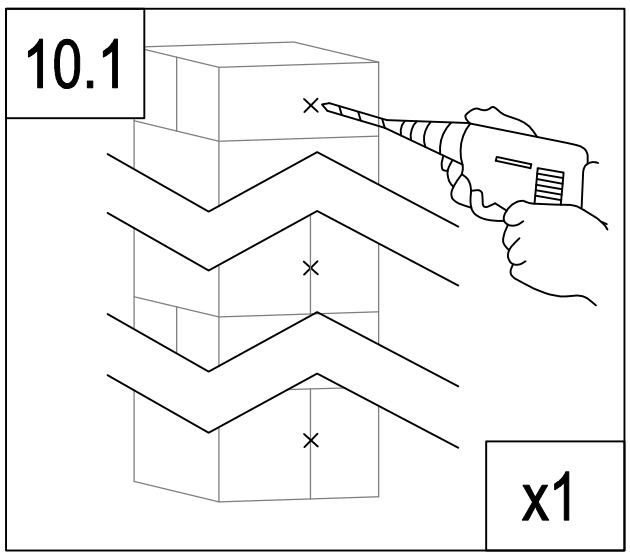

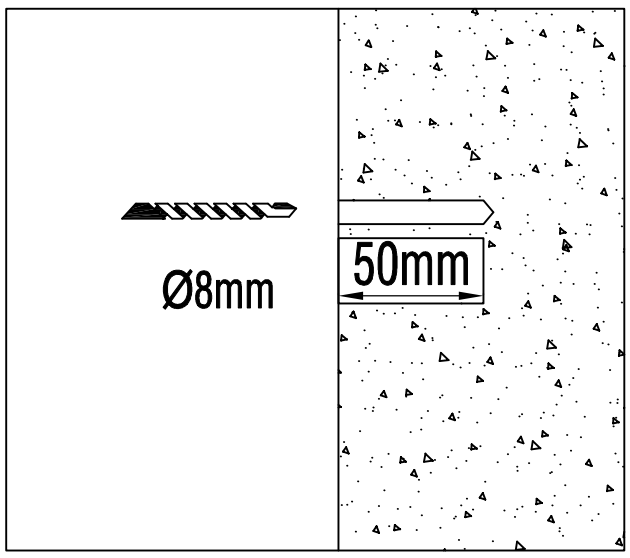

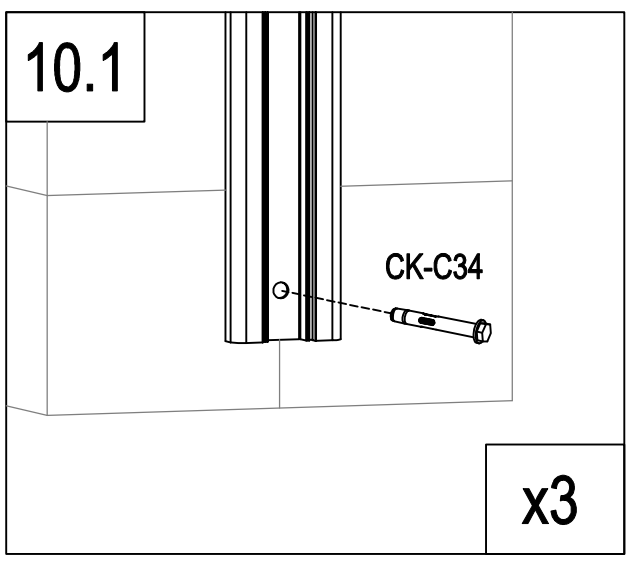

	AT-B9	1
	CK-C34	3

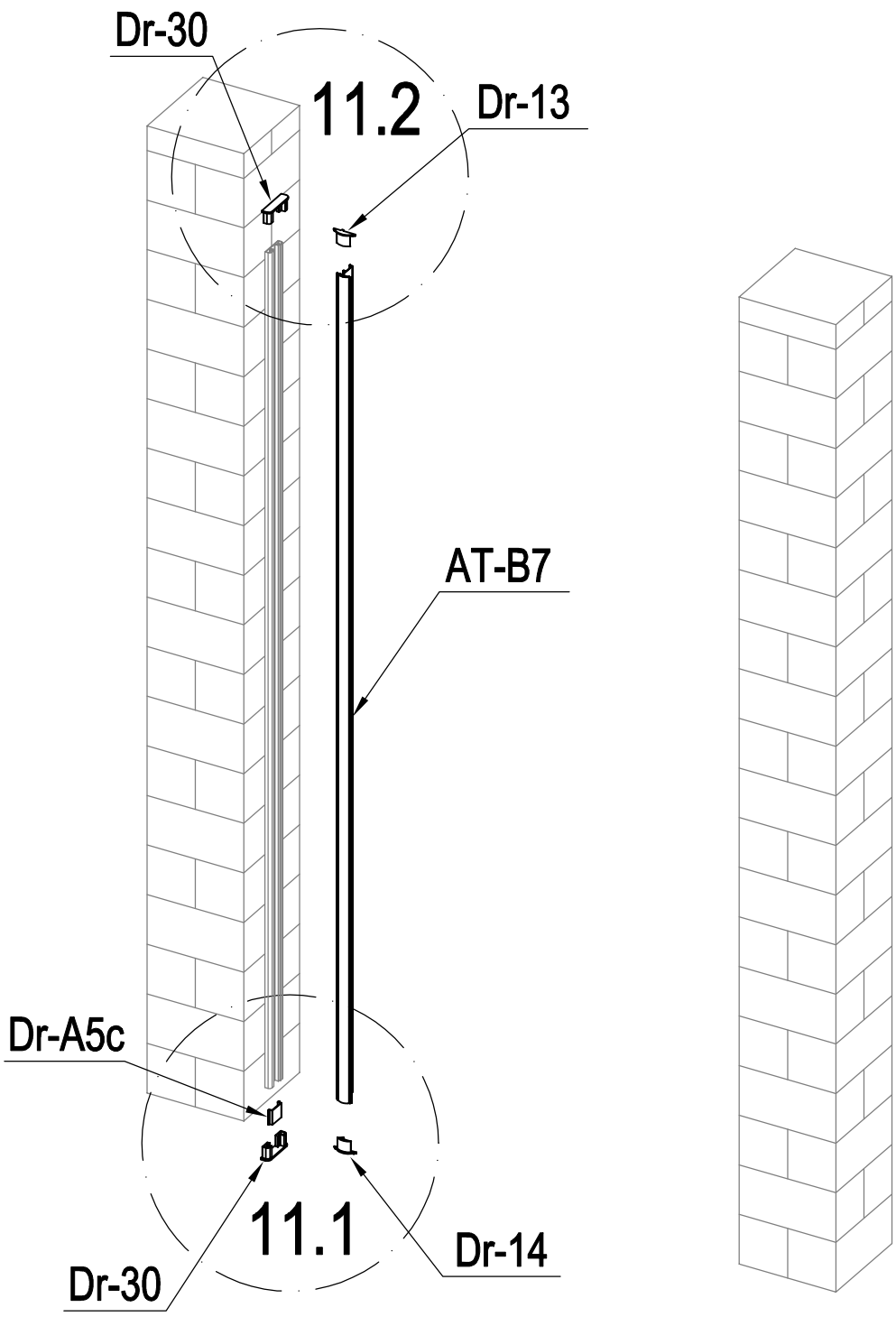

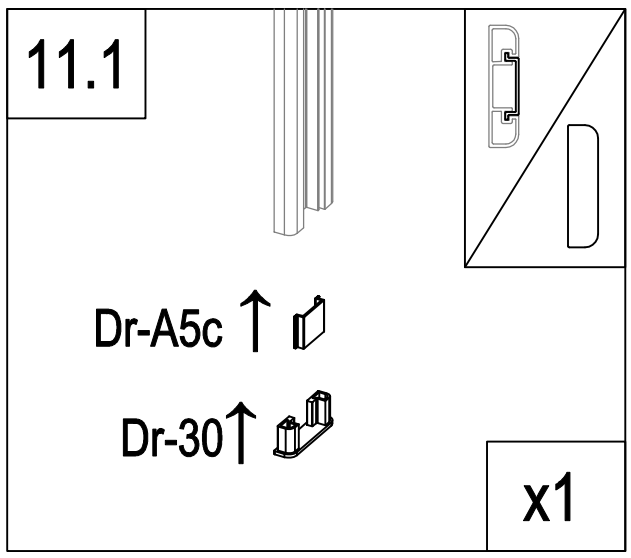

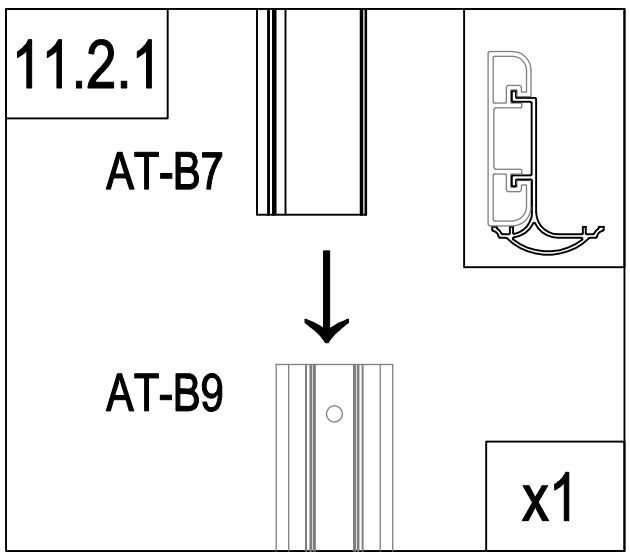

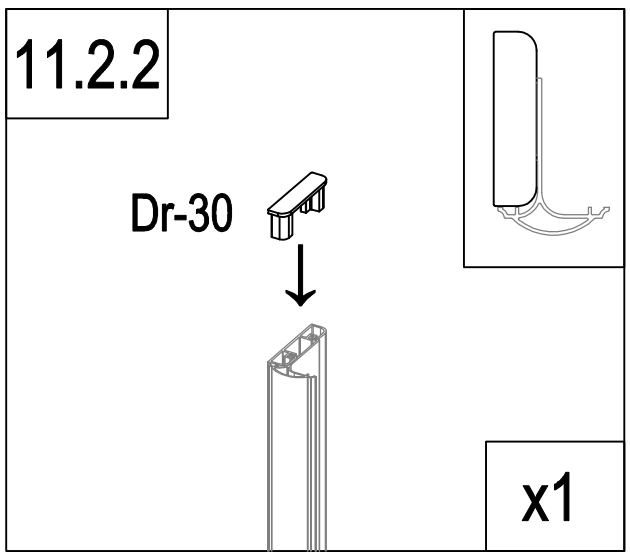

	AT-B7	1
	Dr-13	1
	Dr-14	1
	Dr-30	2
	Dr-A5c	1

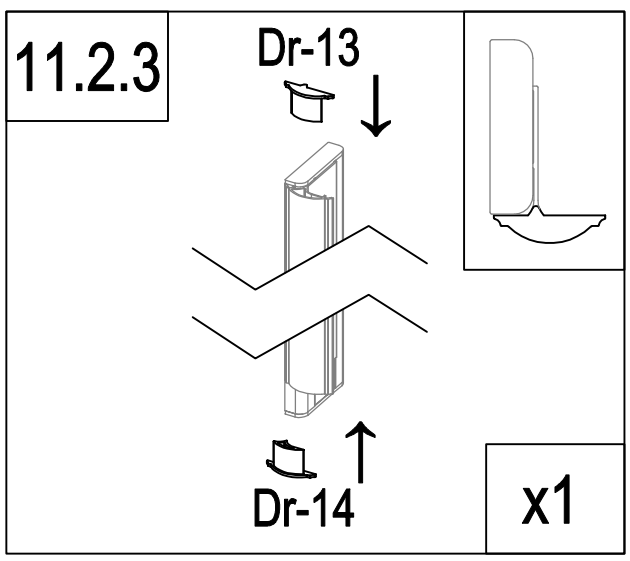

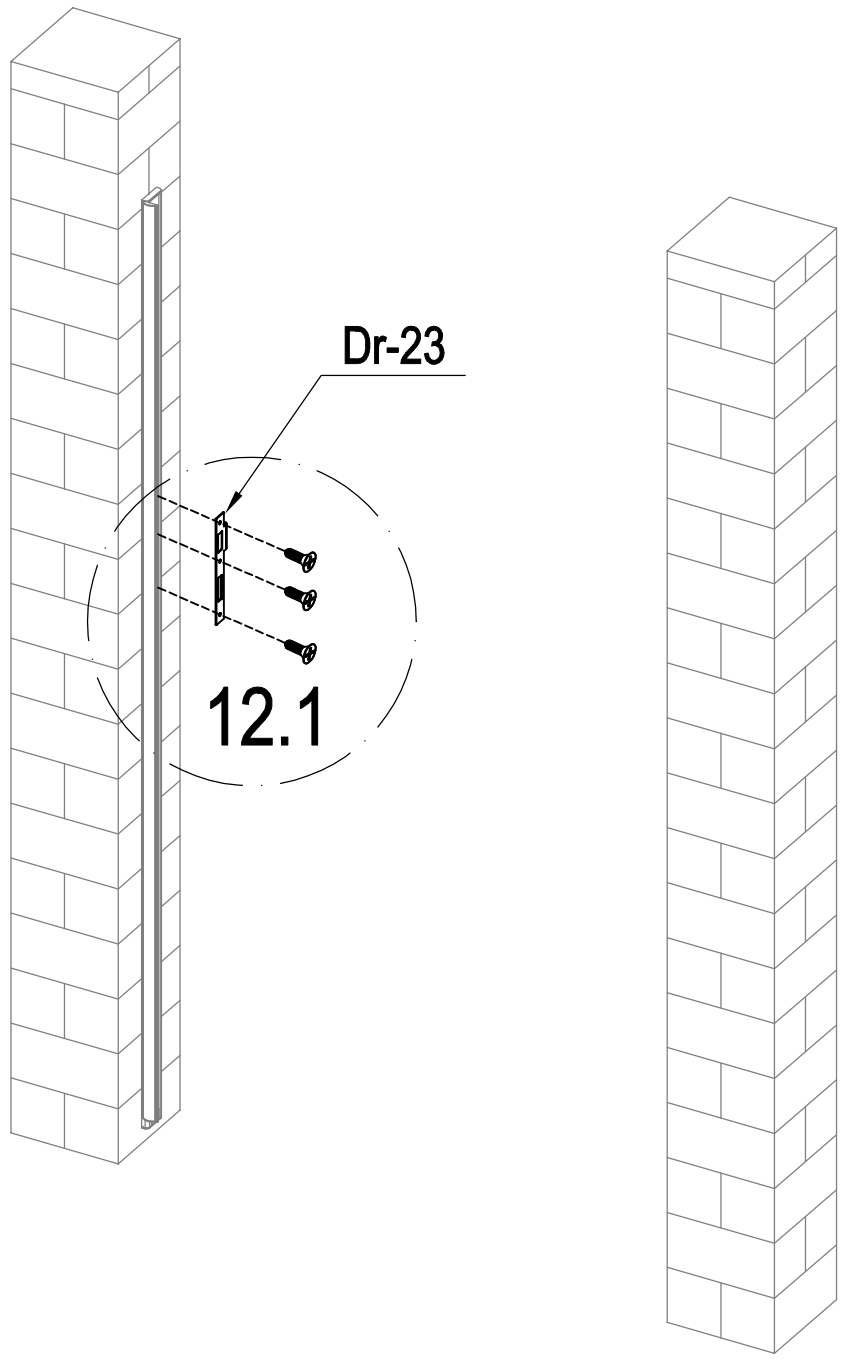

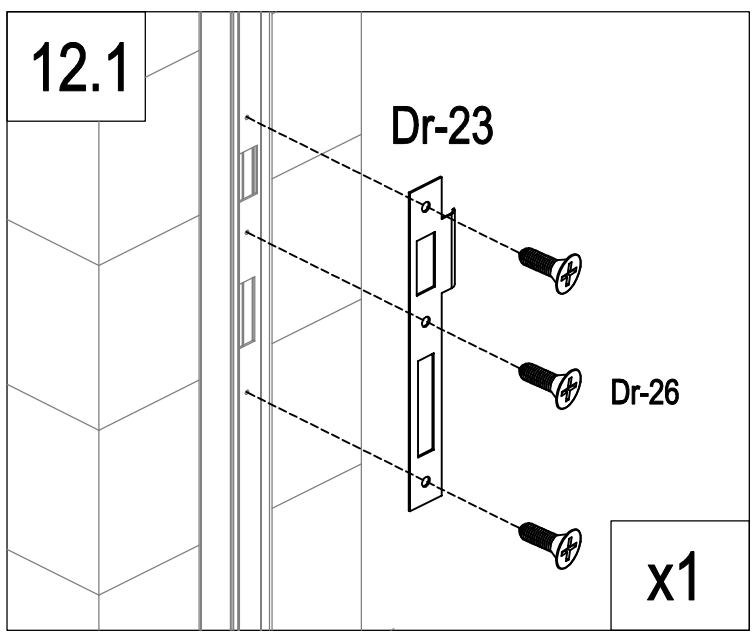

	Dr-23	1
	Dr-26	3

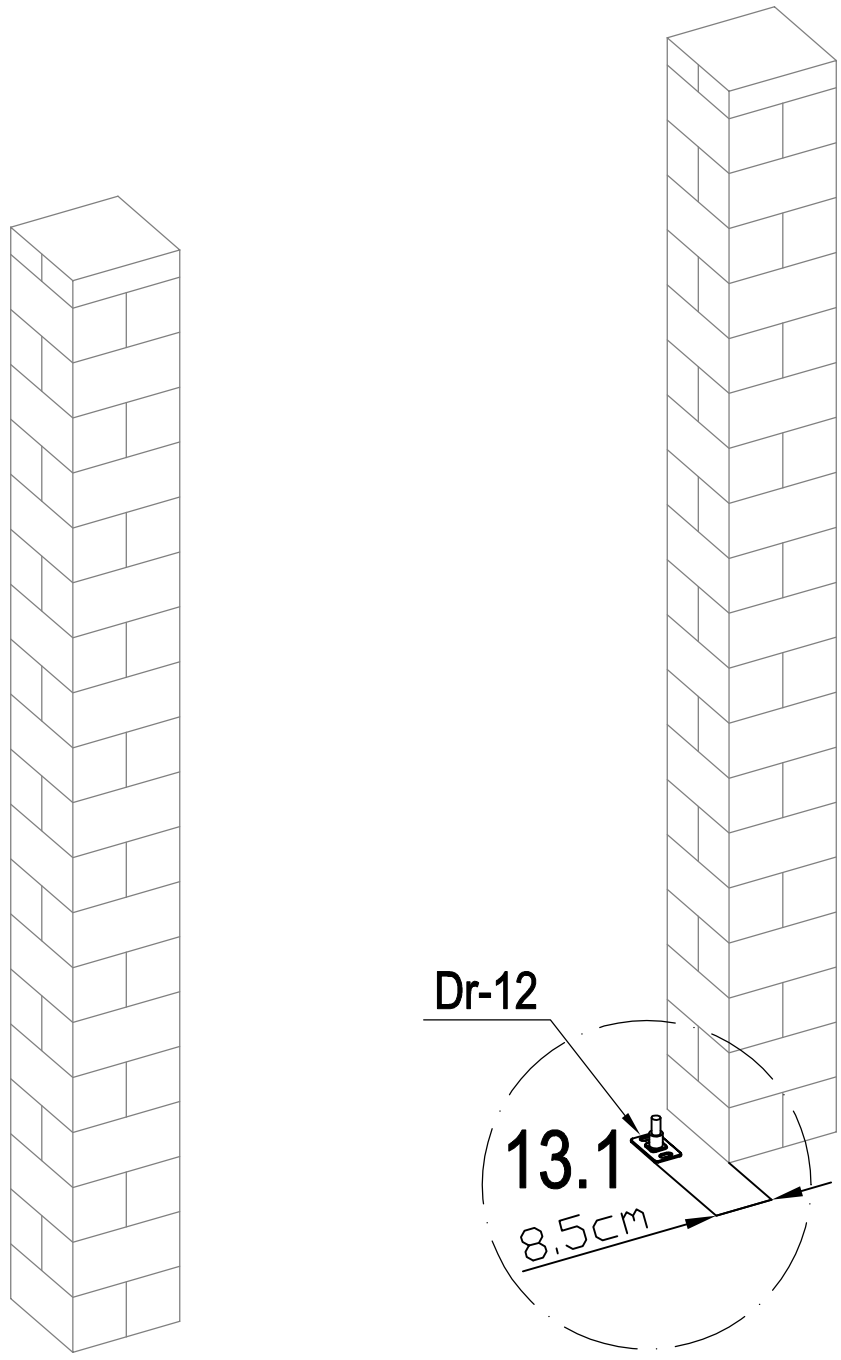

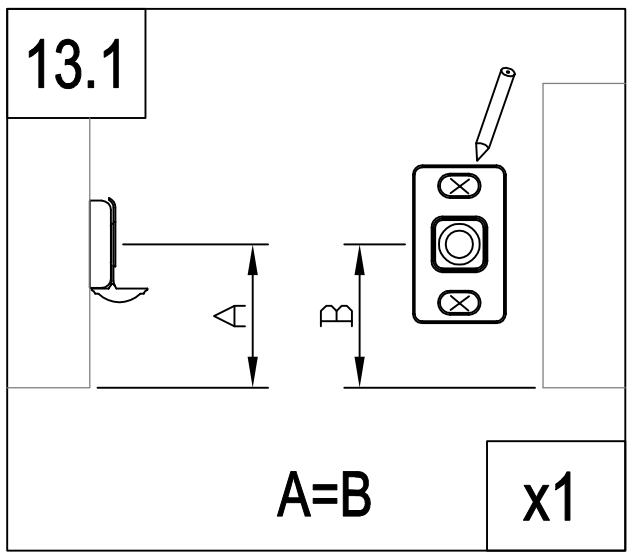

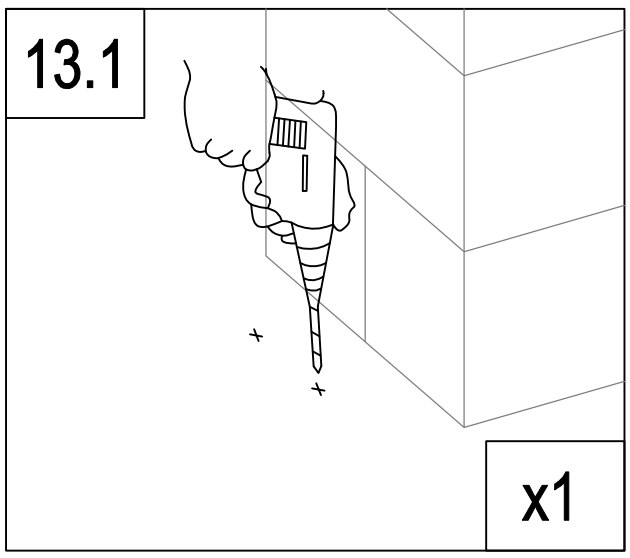

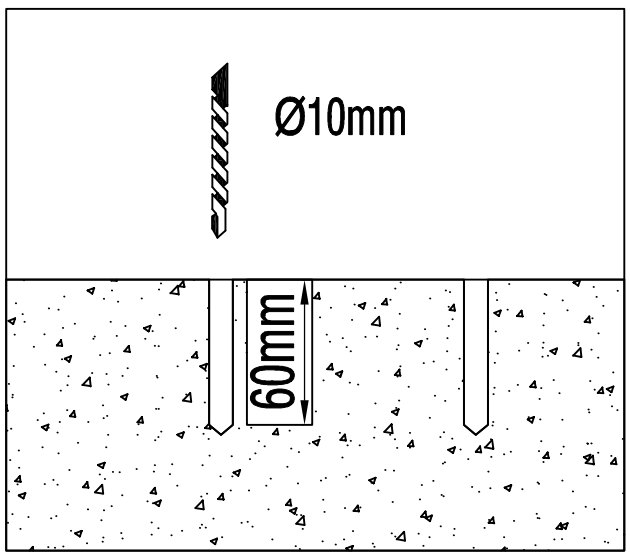

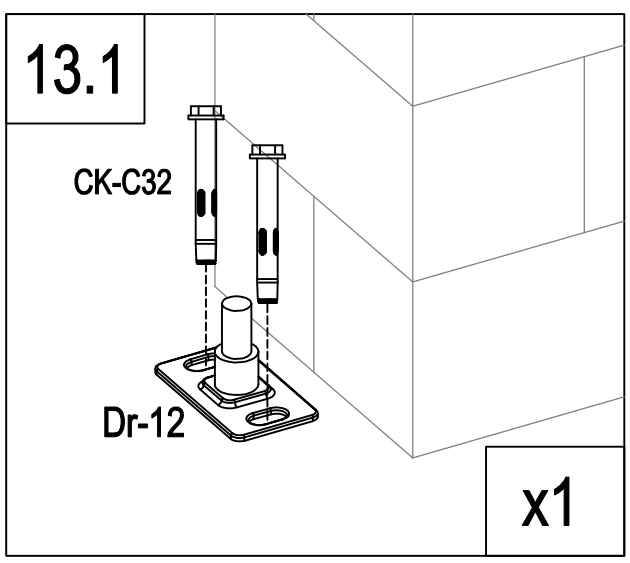

	Dr-12	1
	CK-C32	2

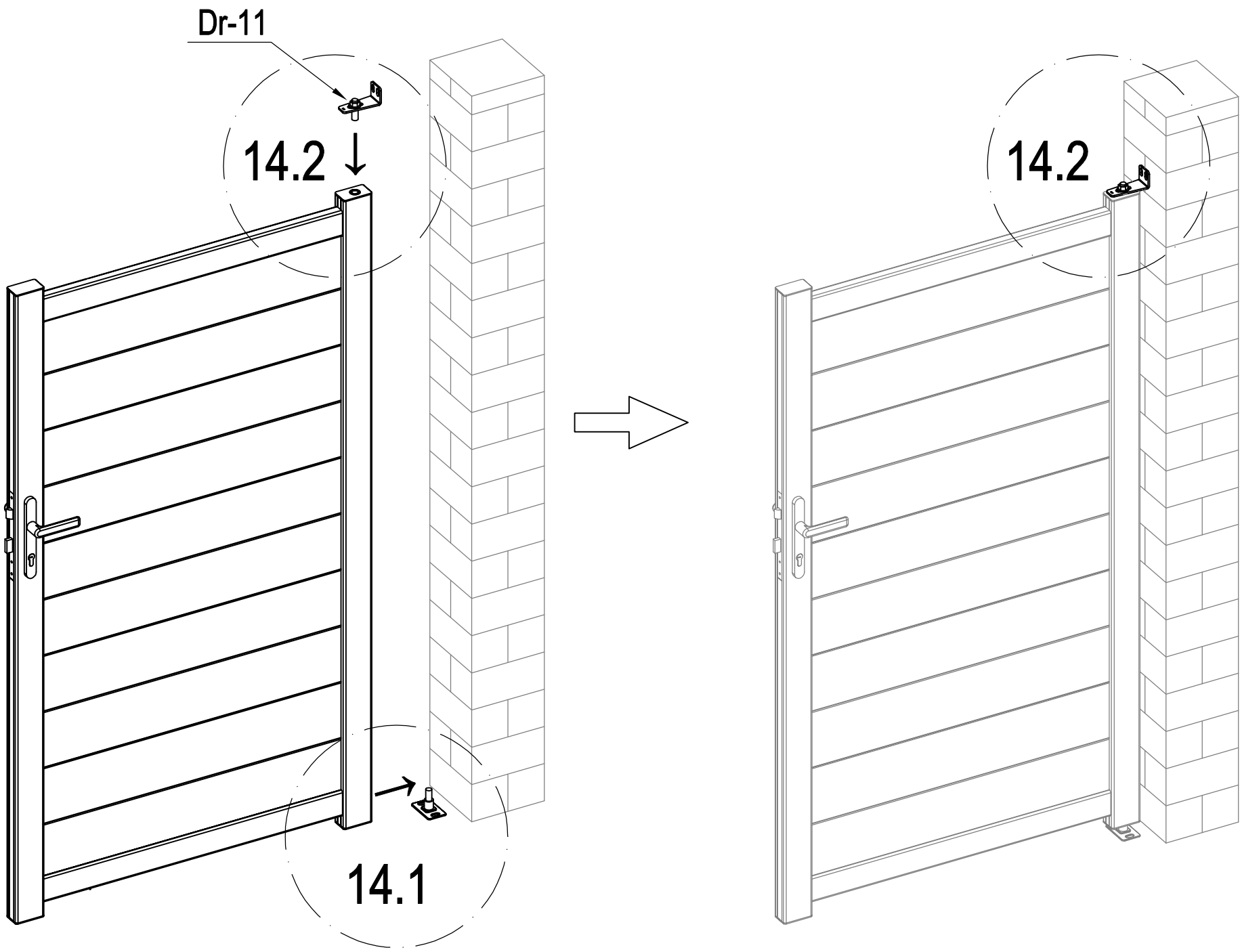

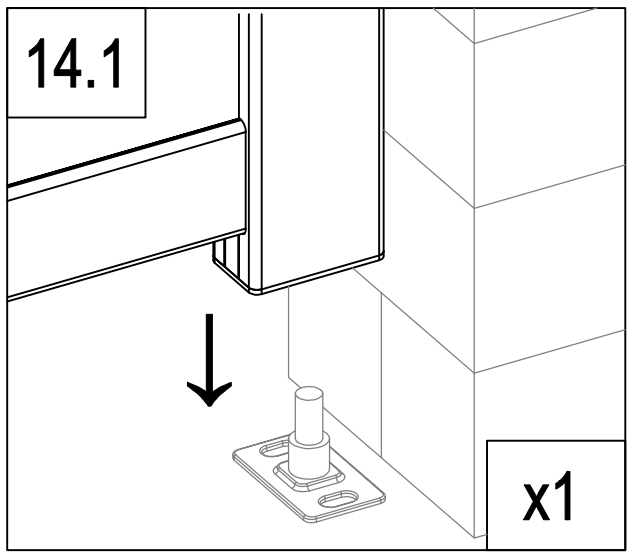

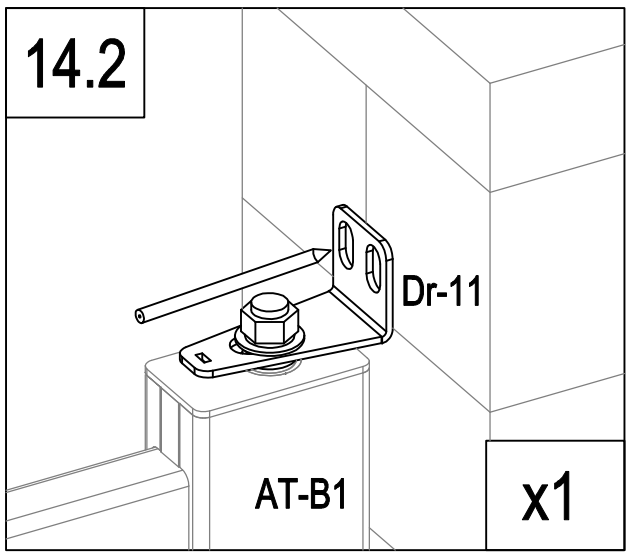

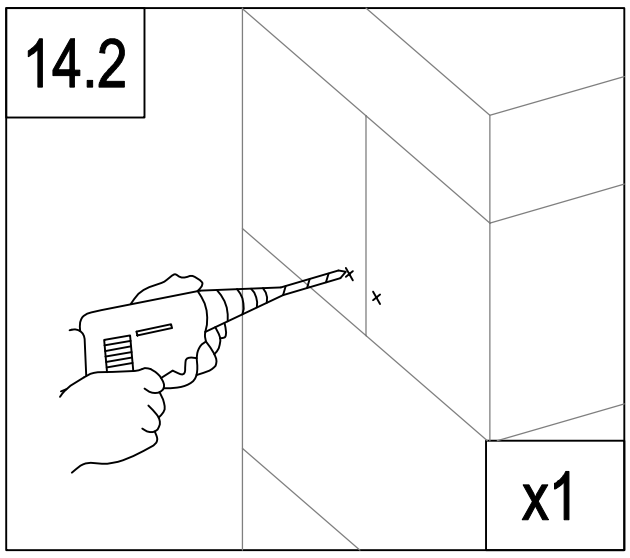

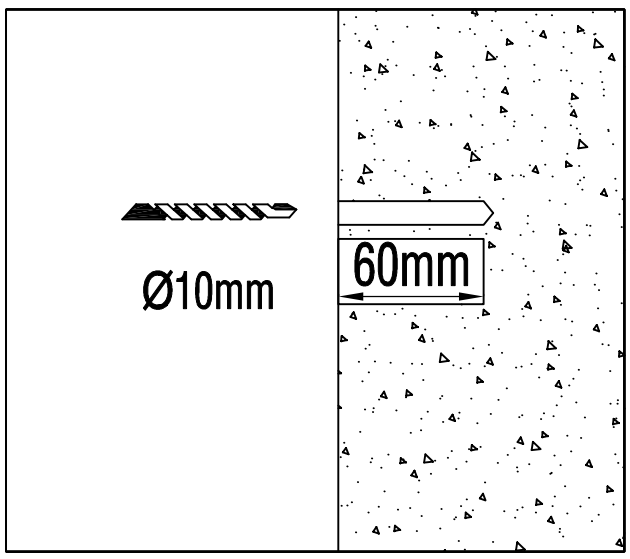

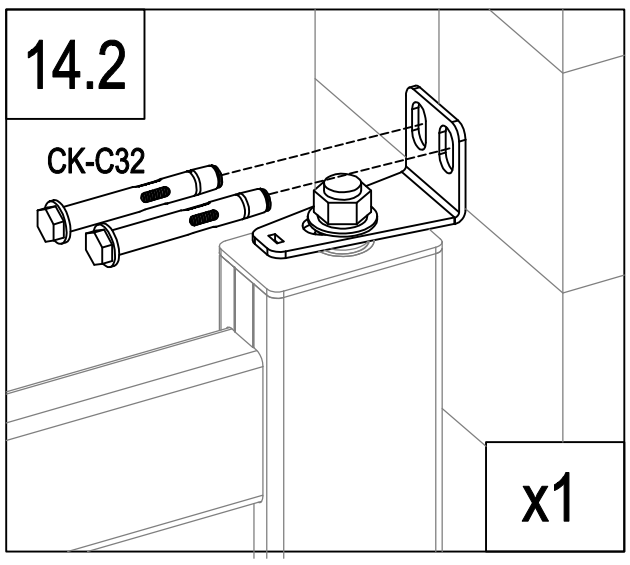

	Dr-11	1
	CK-C32	2

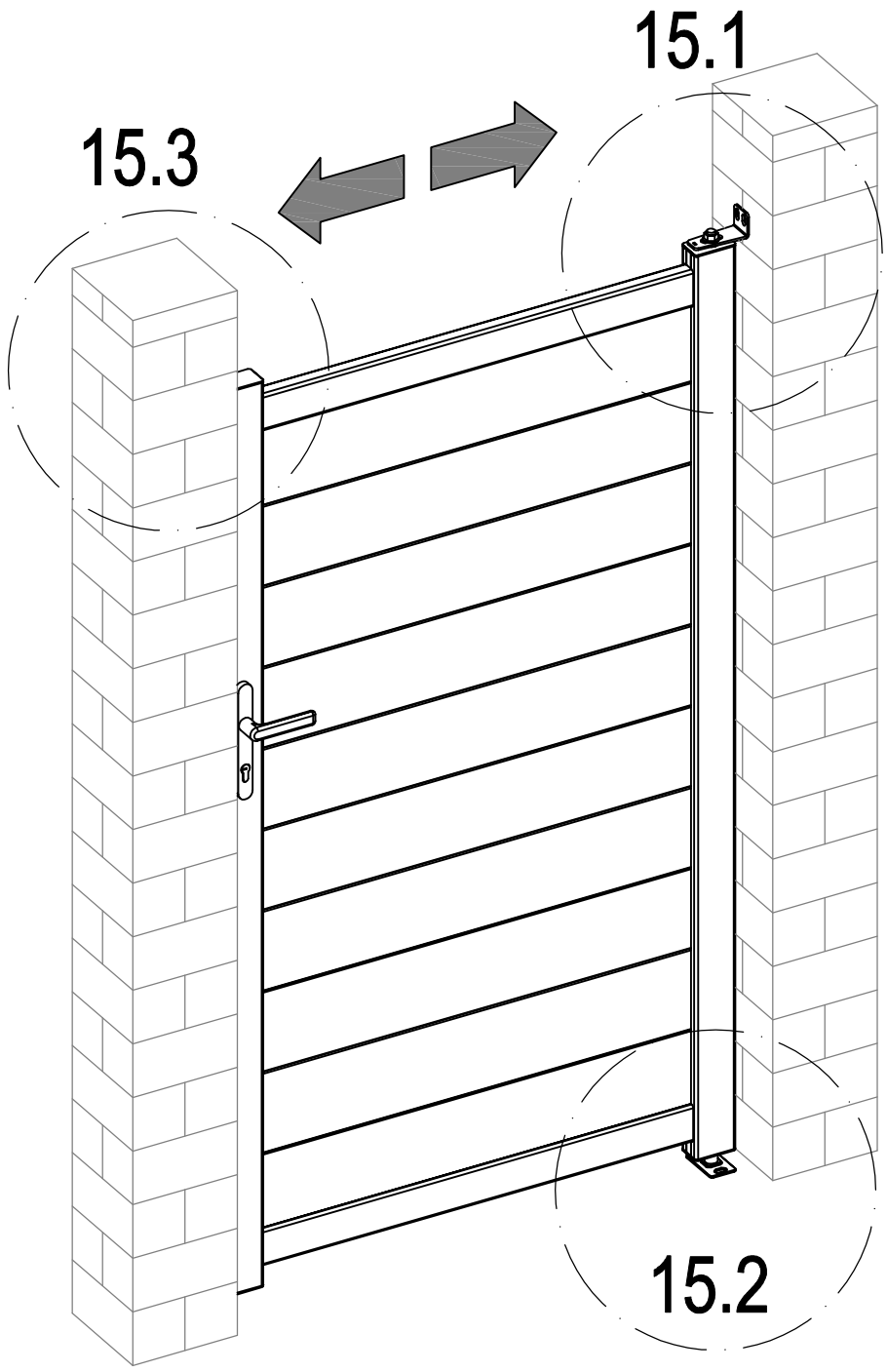
15.1
15.3
15.2

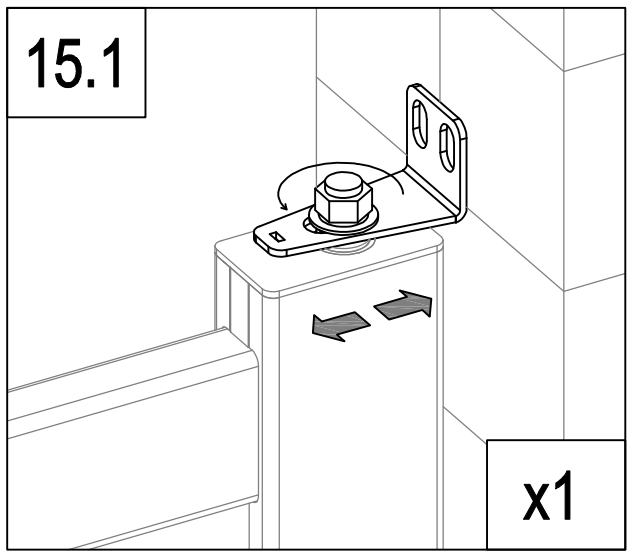
15.1
x1

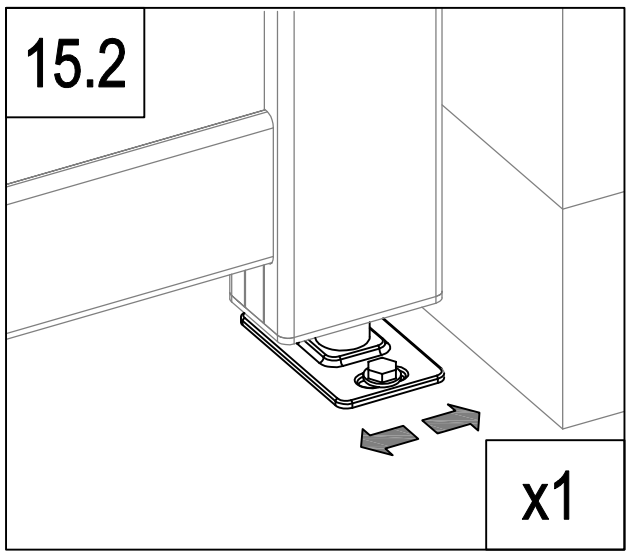
15.2
x1

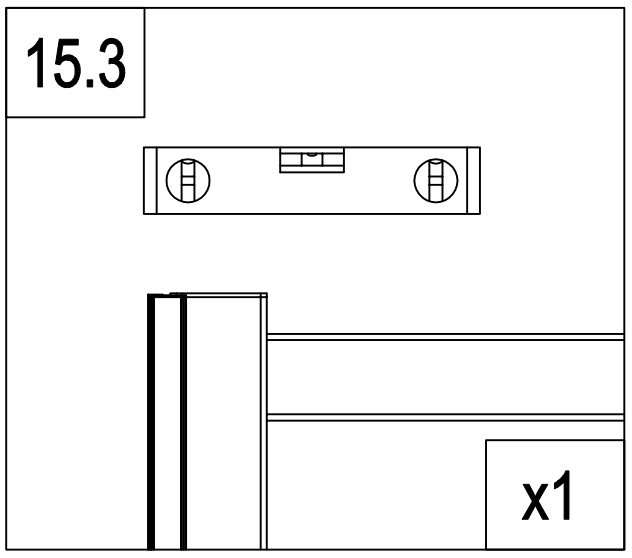
15.3
x1

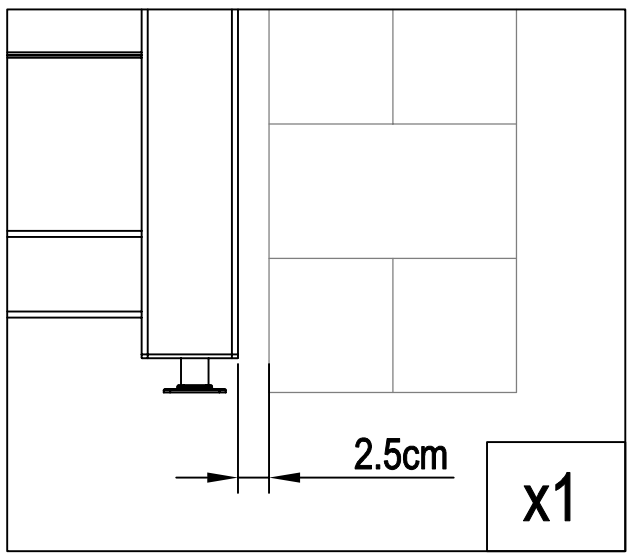
2.5cm
x1

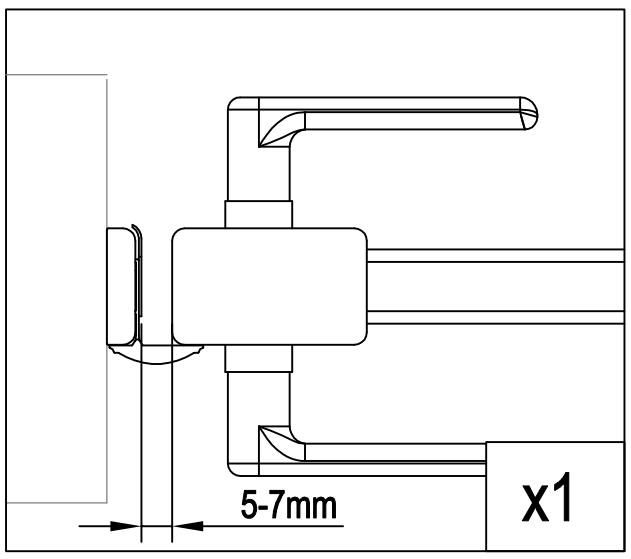
5-7mm
x1

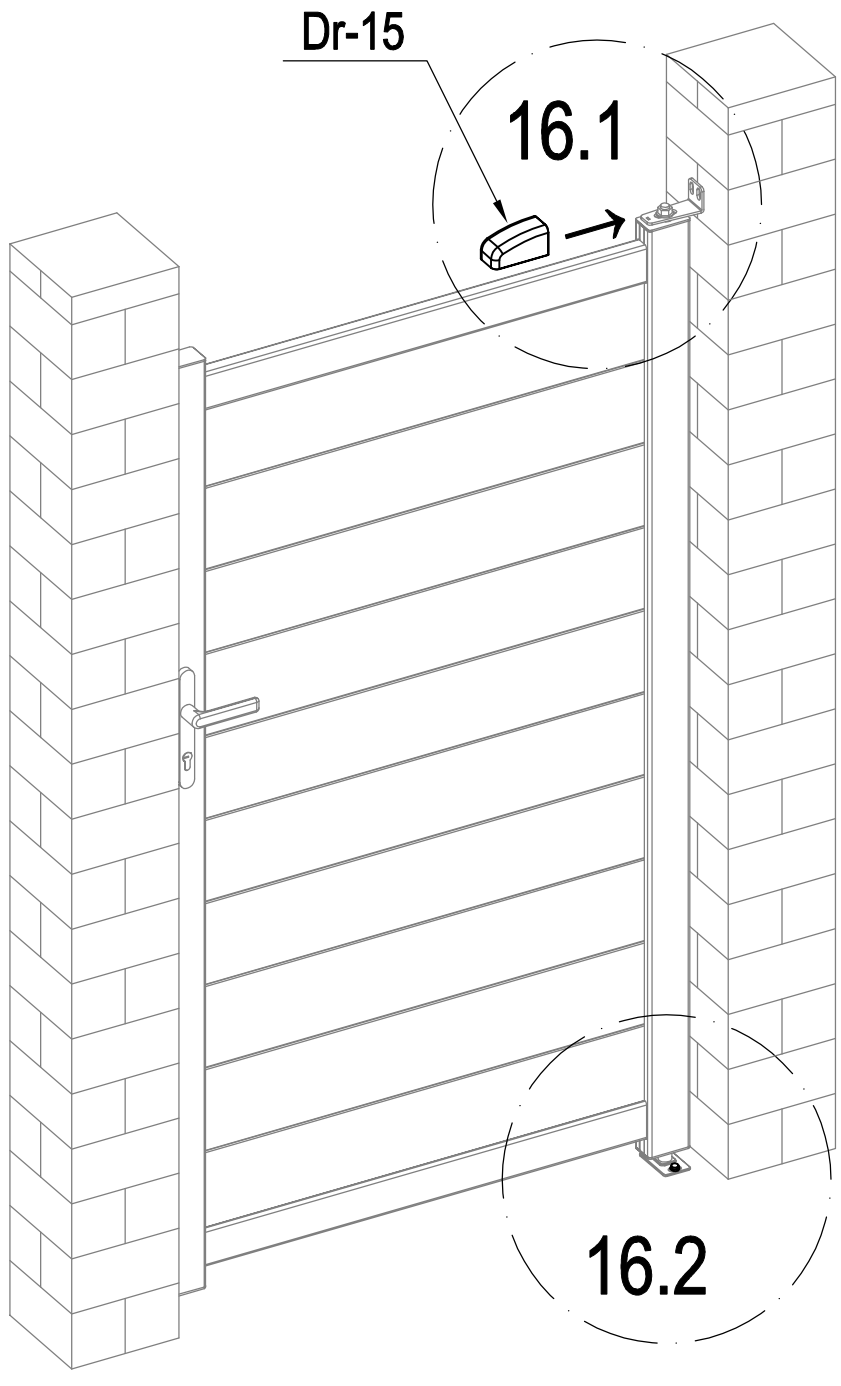

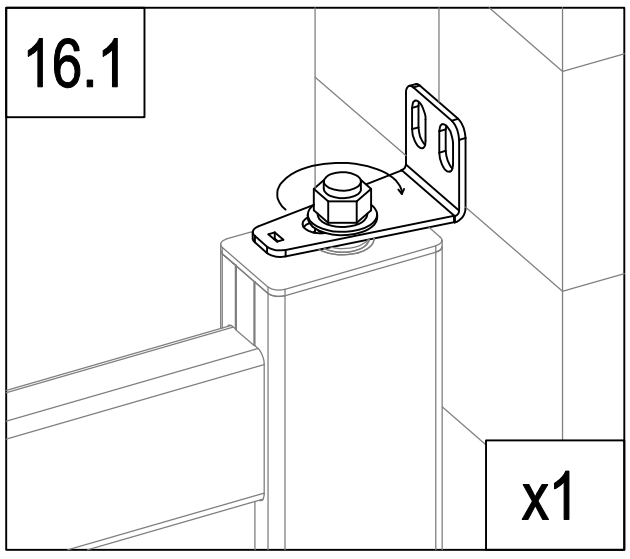

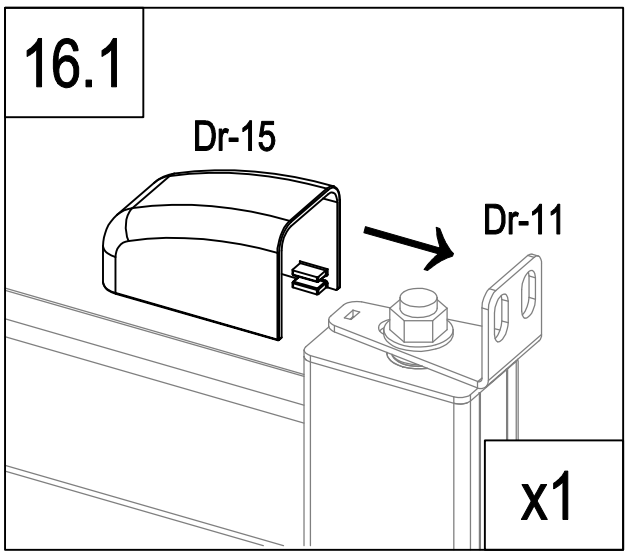

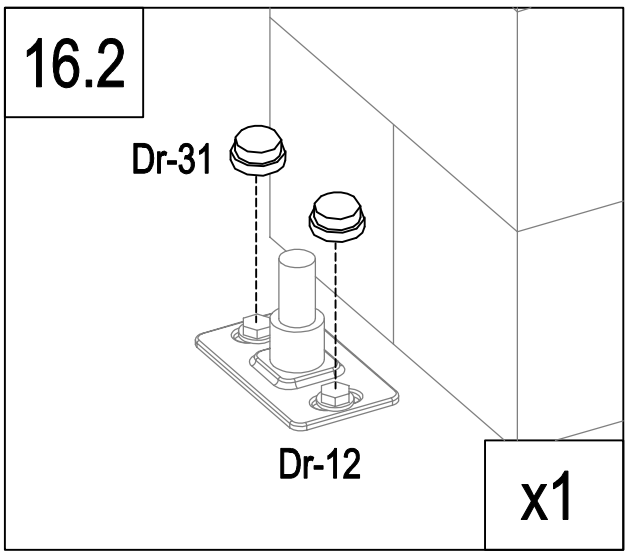

	Dr-15	1
	Dr-31	2

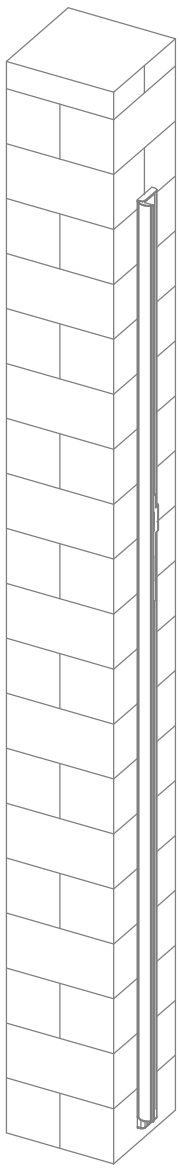

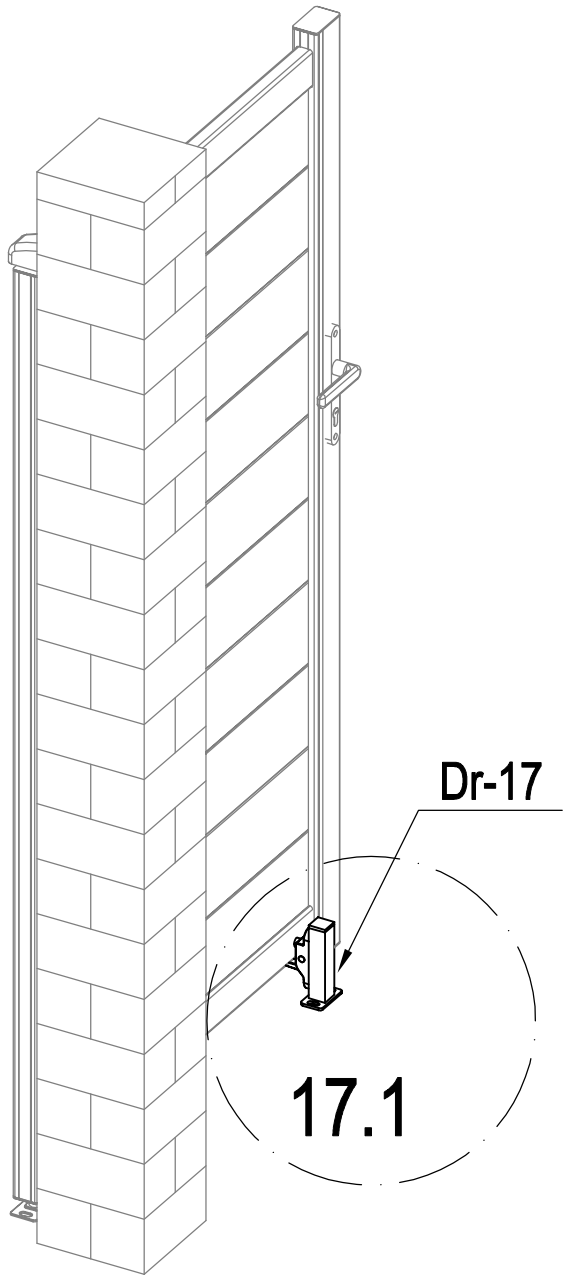

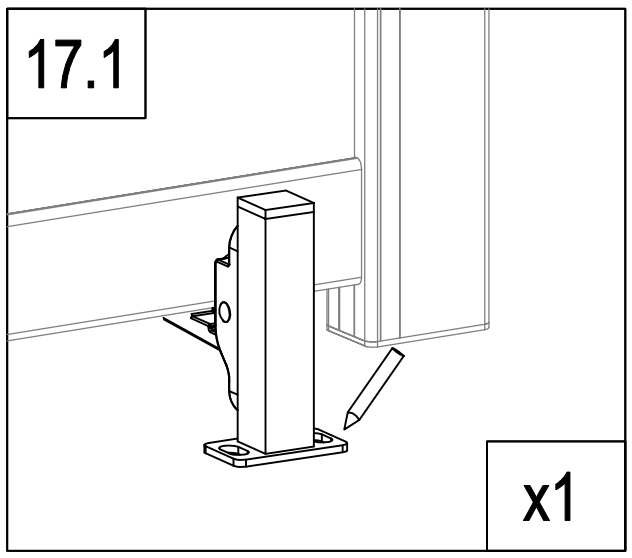

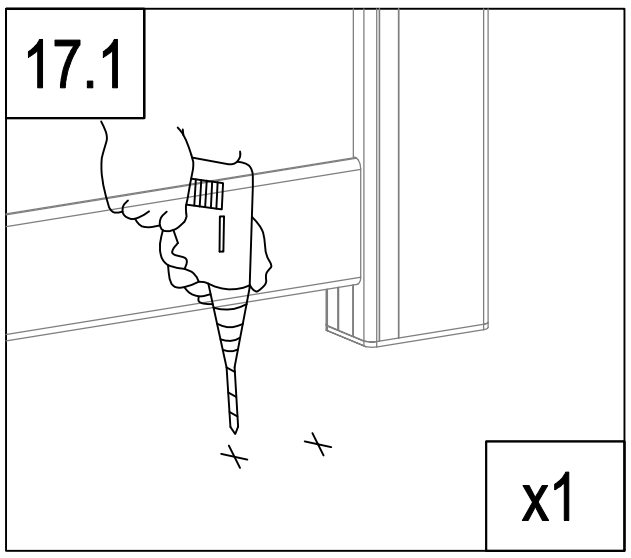

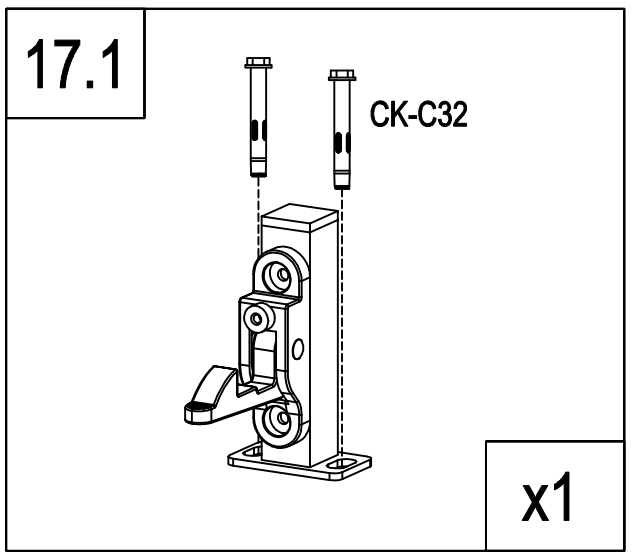

	CK-C32	2
	Dr-17	1