A x1	B x1	C x1	D x1	E x1	F x2	G x1	H x5	I x1
J x1	6*20mm ①*4	6*35mm ②*6	8*35mm ③*3	6*20mm ④*2	6*16mm ⑤*2	⑥*10	Small wrench	A958-3 41393

Step 1:

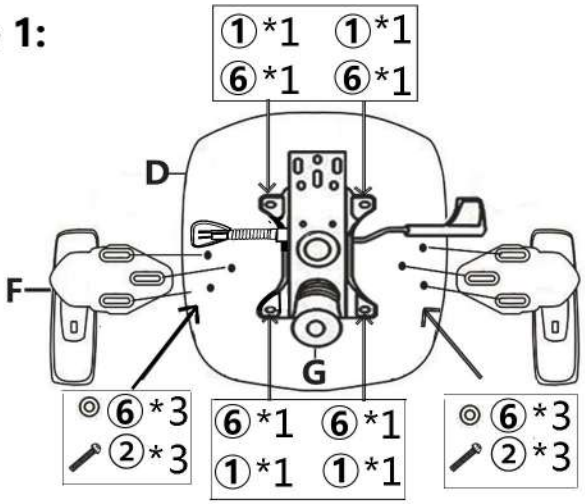

Step 2:

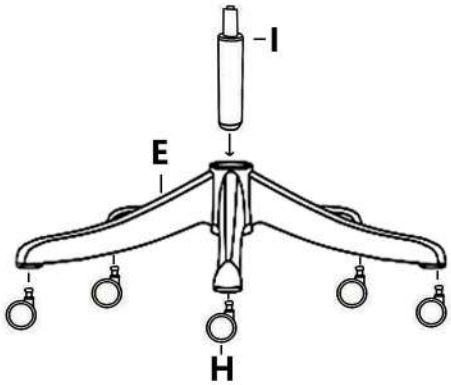

Step 3:

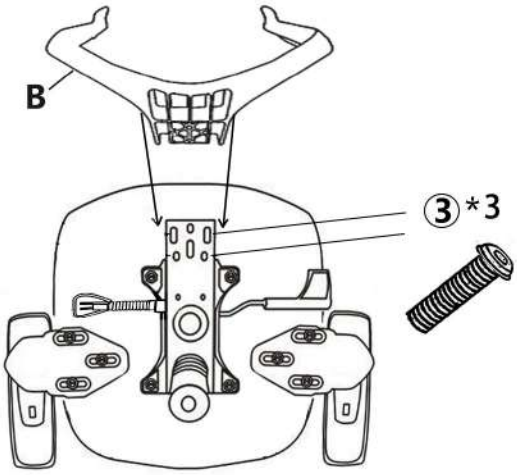

Step 4:

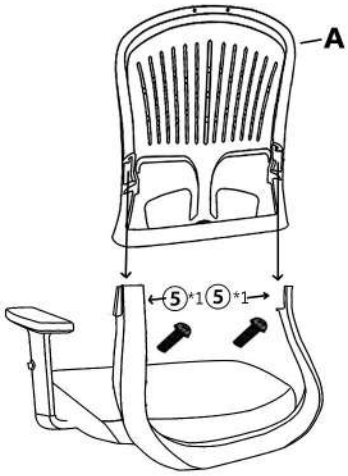

Step 5:

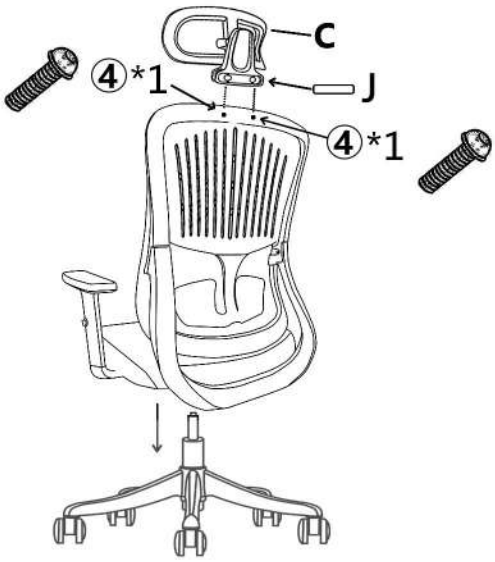

DONE