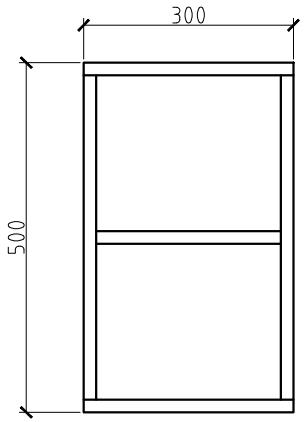

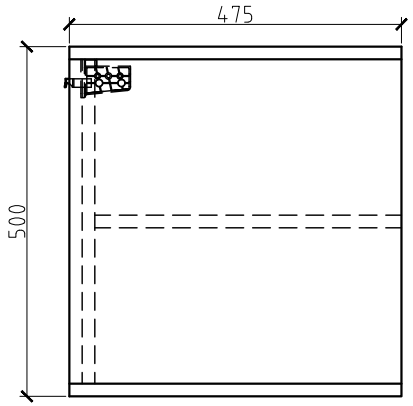

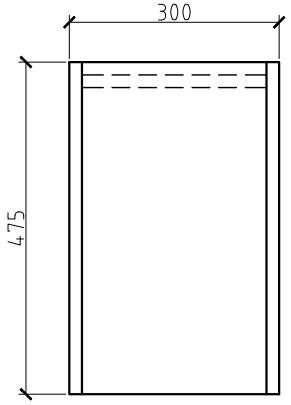

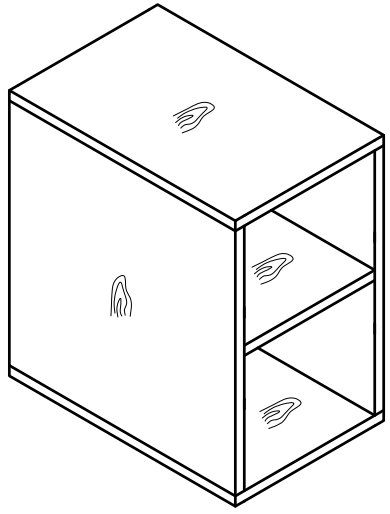

Designer: SR A0
2025-03-13